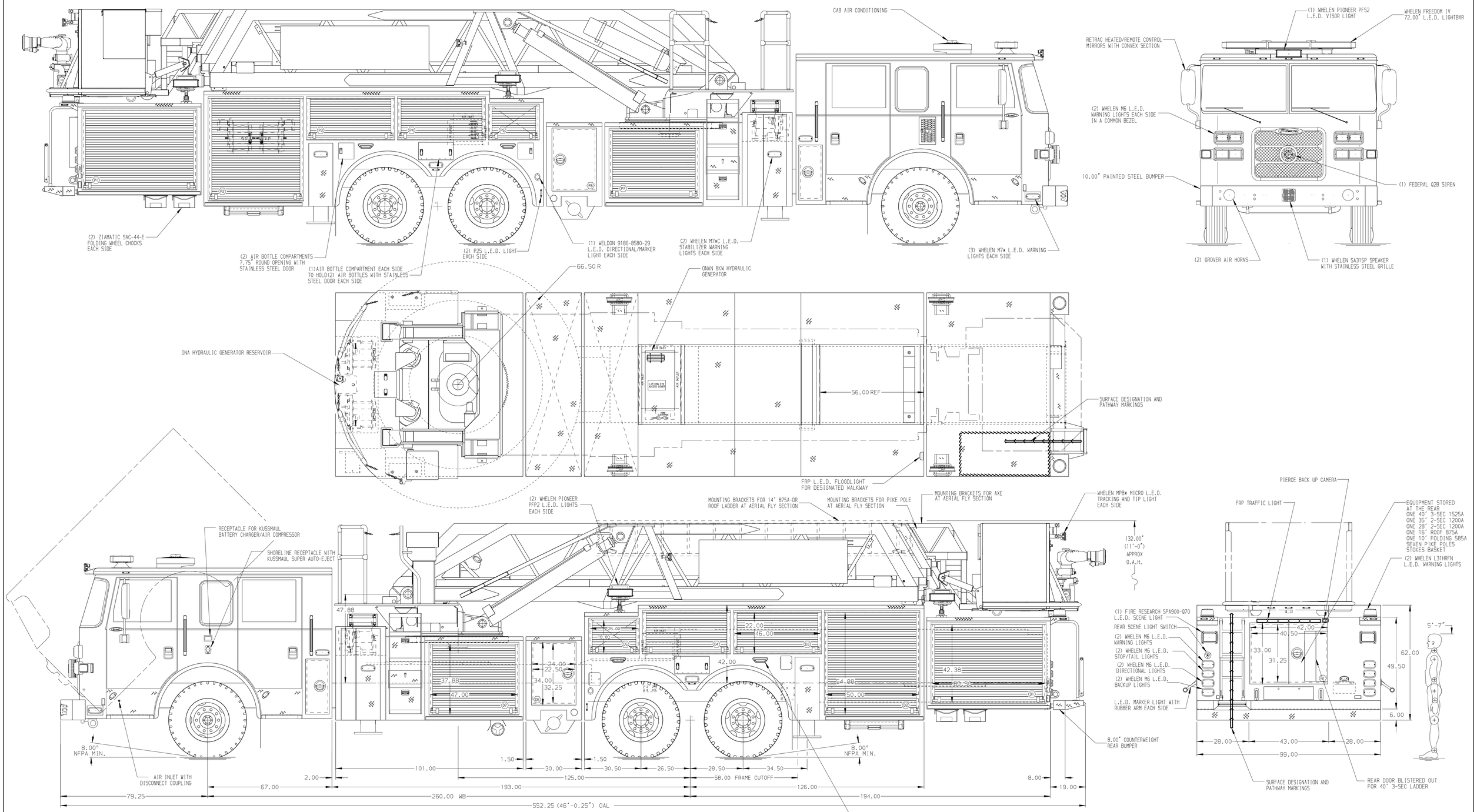

ALUMINUM BODY

NOTE

DIMENSIONS SHOWN ARE APPROXIMATE AND ARE SUBJECT TO MINOR DEVIATIONS AS MAY OCCUR OR BE NECESSARY IN CONSTRUCTION.
MINOR DETAILS NOT SHOWN.

1. BATTERY CHARGER/COMPRESSOR BEHIND PASSENGER'S SEAT WITH COVER
2. INVERTER LOCATED BEHIND DRIVER SIDE CAB SEAT
3. DRIP PAN GUARD FOR ROLL-UP DOOR LOCATED AT EACH SIDE ROLL UP DOOR OPENING
4. ONE FULL WIDTH/DEPTH ADJUSTABLE SHELF IN COMPARTMENT PER SHOP ORDER
5. ONE FLOOR MOUNTED SLIDE-OUT TRAY IN COMPARTMENTS P2
6. CIRCUIT BREAKER PANEL IN COMPARTMENT D7
7. TWO HANNAY ELECTRIC REWIND CORD REEL MODEL 1618-17-18 LOCATED UNDER TURN TABLE
8. HOSE STORAGE BOX ON LEFT SIDE OF BASKET FOR 100' OF 1.75" D.J. POLY HOSE
9. 120V POWER TO AERIAL BASKET
10. 2-WAY INTERCOM SYSTEM BETWEEN AERIAL TIP AND TURNTABLE
11. BREATHING AIR TO AERIAL TIP
12. BREATHING AIR TO TURNTABLE
13. (2) HURST HYDRAULIC REEL LOCATED IN COMPARTMENT P2
14. 3-IN-1 LYFE BRACKETS ON FRONT OF BASKET
15. SUB FEED BREAKER BOX IN COMPARTMENT D7
16. TWO SLIDE OUT TOOL BOARDS IN COMPARTMENT D2
17. VERTICAL PARTITION IN COMPARTMENT D2
18. PEGBOARD ON BACK WALLS IN COMPARTMENTS D7 & P7
19. RUBBER FENDER CROWNS
20. TWO FLOOR EXTENSIONS LOCATED IN COMPARTMENTS D6 & P6

REV	DATE	BY	CH
7	07MAY18	SVA	GRM
6	27SEP17	SVA	DTS
5	21SEP17	SVA	DTS
4	21JUL17	SVA	GRM

CHASSIS DATA
MAKE: PIERCE
MODEL: ARROW-XT
DWG NO.: 31327AD

Pierce MANUFACTURING INC.

TITLE: 95 FT. MIDMOUNT AERIAL PLATFORM & BODY ASSY (MMP95A) NO PUMP, NO TANK
FOR: KEARNY, TOWN OF KEARNY,NJ

JOB NO.	31327
SCALE	1:24
DATE	
DRAWN BY	SVA
	11JUL17
CHECKED BY	GRM
	12JUL17
SHEET SIZE	D
SHEET NO.	1 OF 1

View File Created 07-MAY-2018 10:01:55