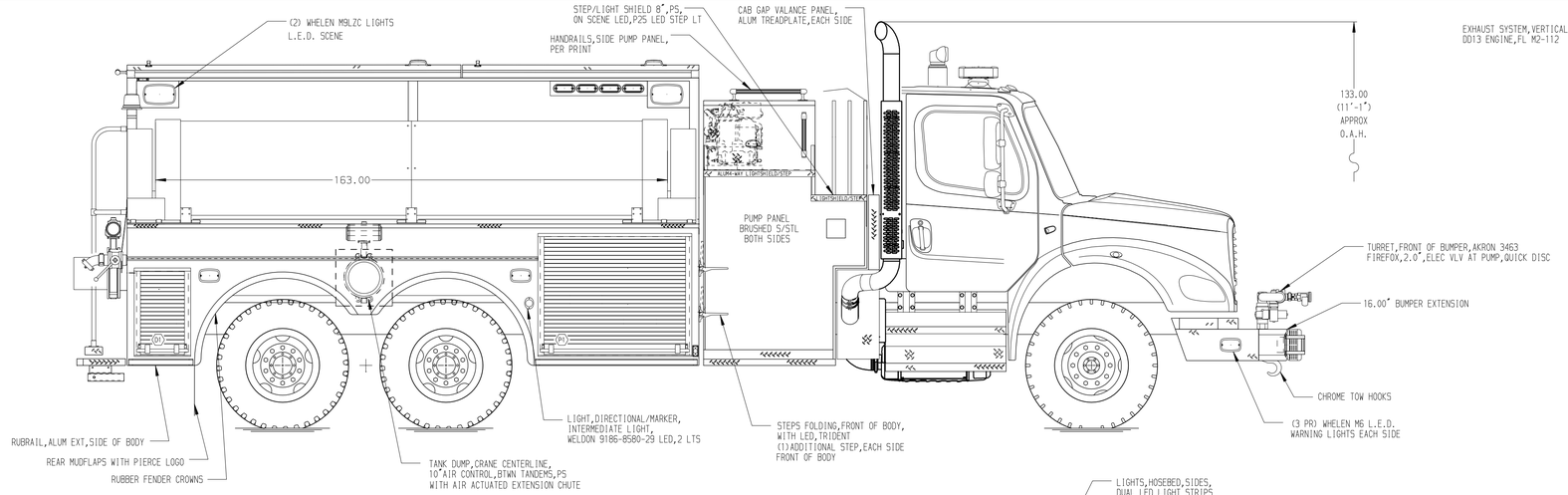

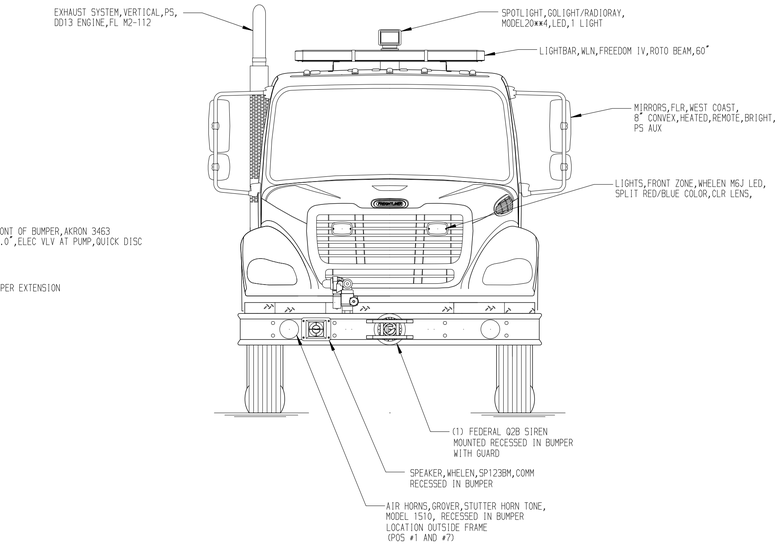

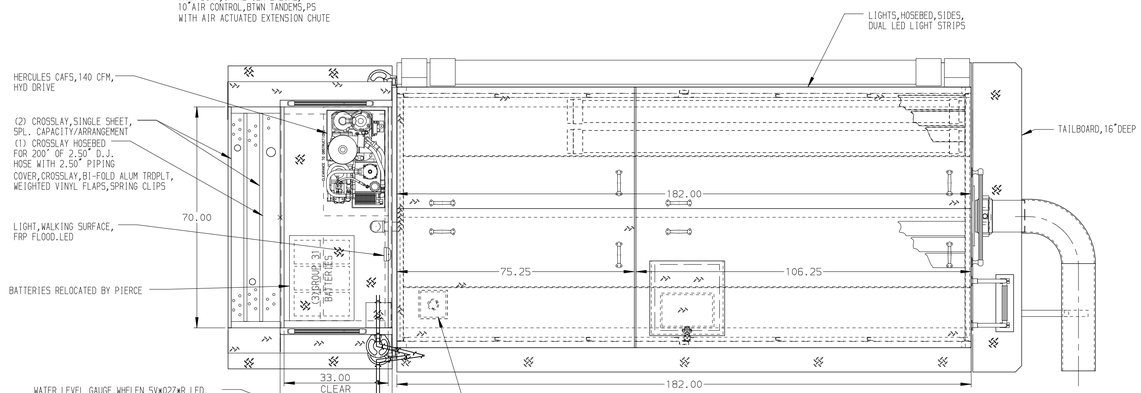

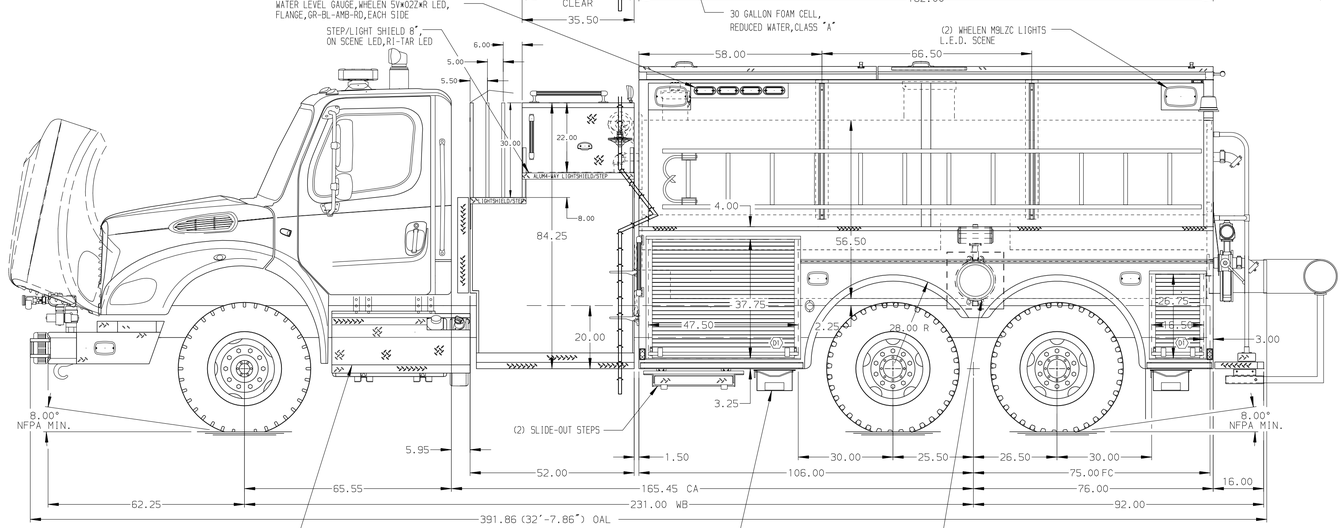

HOSEBED CAPACITIES

(1) 1000' OF 5.00" D.J. POLYESTER HOSE

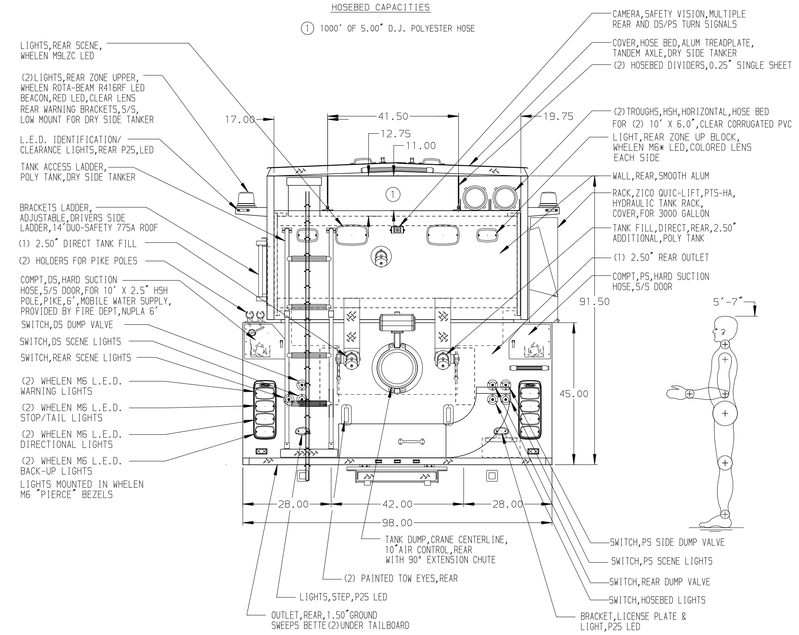

ALUMINUM BODY

NOTE

DIMENSIONS SHOWN ARE APPROXIMATE AND ARE SUBJECT TO MINOR DEVIATIONS AS MAY OCCUR OR BE NECESSARY IN CONSTRUCTION.
MINOR DETAILS NOT SHOWN.

REV	DATE	BY	CH
4	14NOV17	RWI	NAS
3	30SEP17	JLA	NAS
2	18JUL17	RWI	JAF

CHASSIS DATA — MAKE: FL — MODEL: M2-112

Pierce MANUFACTURING INC.

TITLE: 1250-D-2470 GAL,30 FOAM,182"DRYSIDE BODY
52"SIDE CONTROL,(2)1.5"CROSSLAYS,(1)2.5"CROSSLAY

FOR: CASA GRANDE,CITY OF
CASA GRANDE,ARIZONA

DWG NO.: 31371AD

JOB NO.	31371
SCALE	1:24
DRAWN BY	JAF
DATE	16MAY17
CHECKED BY	RWI
DATE	19MAY17
SHEET SIZE	D
SHEET NO.	1 OF 1

View File Created 14-NOV-2017 14:16:41