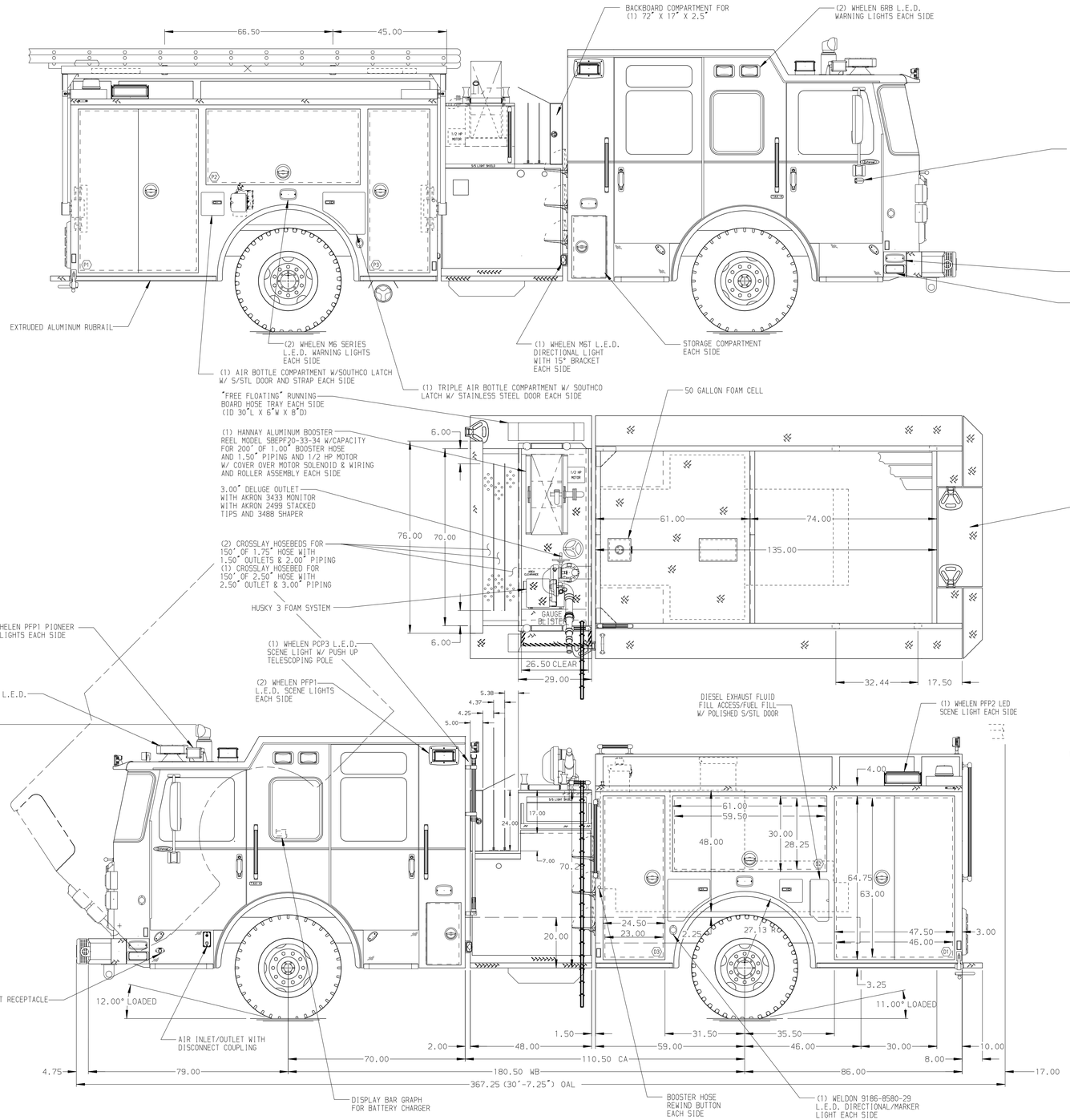

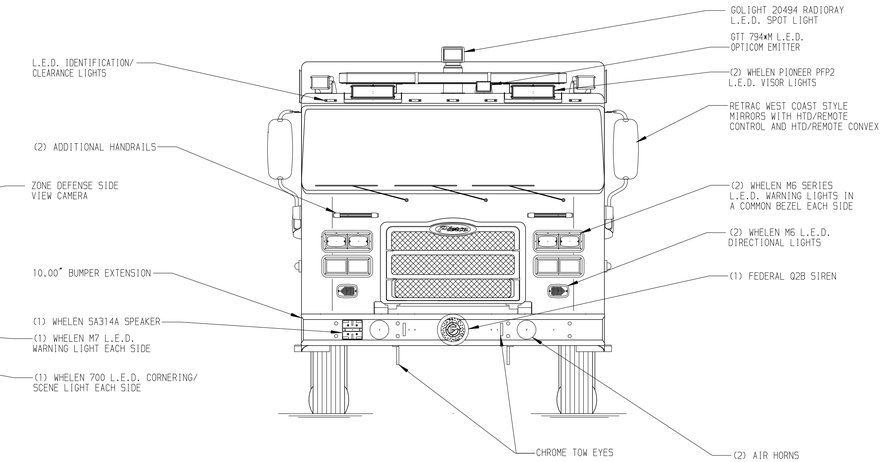

TORX HEAD SCREWS

NUTCERTS

COMPRESSION FITTINGS

HOSEBED CAPACITIES

1. 200' OF 1.75" D.J. POLY HOSE
   300' OF 2.50" D.J. POLY HOSE ON TOP
2. 600' OF 2.50" D.J. POLY HOSE
3. 600' OF 3.00" D.J. POLY HOSE
4. 600' OF 3.00" D.J. POLY HOSE

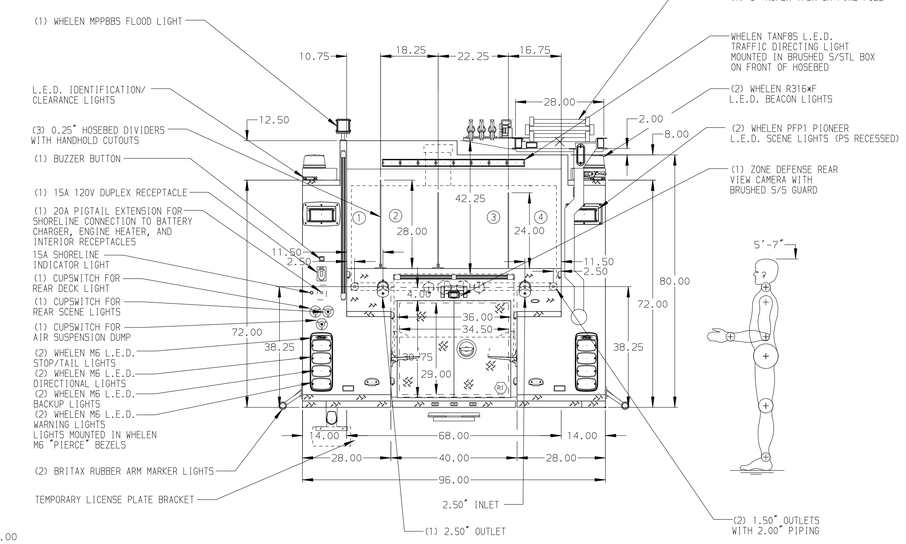

ALUMINUM BODY

MAXIMUM O.A.H. 120.00"

SIDE ROLL AND FRONTAL IMPACT PROTECTION

NOTE

DIMENSIONS SHOWN ARE APPROXIMATE AND ARE SUBJECT TO MINOR DEVIATIONS AS MAY OCCUR OR BE NECESSARY IN CONSTRUCTION.
MINOR DETAILS NOT SHOWN.

1. BRUSHED S/S SCUFFPLATE LOCATED AT EACH CAB DOOR JAMB
2. (CTF) MUDFLAPS LOCATED FRONT AND REAR
3. S/STL FENDER CROWNS LOCATED FRONT AND REAR
4. IOTA BATTERY CHARGER W/ S/STL COVER LOCATED BEHIND DRIVERS SEAT
5. PULL STRAPS FOR COMPARTMENT DOORS D2 & P2
6. BRUSHED S/S SCUFFPLATE LOCATED ON REAR CAB CORNERS
7. 3M POLY SCUFFTAPE LOCATED ON ALL AIR BOTTLE COMPARTMENT OPENINGS
8. ONE ADJ FULL WIDTH/DEPTH SHELF W/SQUARE CORNERS IN COMPARTMENTS P1 AND P2; TWO IN D3
9. TWO ADJ FULL WIDTH/DEPTH SHELF W/SQUARE CORNERS AND 1" FRONT IN COMPARTMENT D1; THREE IN P3
10. CTF WHEEL CHOCKS AND BRACKETS
11. ONE SWING-OUT ALUMINUM TOOLBOARD IN COMPARTMENT D2
12. BRUSHED S/S ON FRONT COMPARTMENT BULKHEADS
13. BRUSHED S/S SCUFFPLATES ON EACH INTERIOR BODY COMPARTMENT DOOR PAN
14. BRUSHED S/S SCUFFPLATES ON FRONT AND SIDES OF HOSEBED WALLS
15. BRUSHED S/S SCUFFPLATES ON BOTTOM DOOR FRAMES OF D1, D2, D3, P1, P2, P3 & R1
16. BRUSHED S/S SCUFFPLATED LOCATED ON FRONT AND REAR WALLS OF BACKBOARD COMPARTMENT
17. PEGBOARD WITH TRACKS ON REAR WALL OF COMPARTMENT D2
18. 1000W IMMERSION HEATER
19. "U" SHAPED ALUMINUM 4-WAY LOCATED ON CREW CAB ROOF
20. COMPARTMENT VENTILATION SYSTEM
21. (1) 120V 15A DUPLEX SHORELINE RECEPTACLE BEHIND OFFICER SEAT
22. DOOR FRAME HINGE REINFORCEMENT LOCATED ON EACH BODY COMPARTMENT
23. 19SLB GAS CYLINDERS ON DOORS IN COMPARTMENTS D2 & P2
24. DOORS TO OPEN PAST 90 DEGREES IN COMPARTMENTS D2 & P2
25. SHELF TRACKS LOCATED IN COMPARTMENTS D1, D3, P1, P2, & P3

REV	DATE	BY	CH
1	11DEC17	AMI	SHA
2	17NOV17	JWO	SHA

CHASSIS DATA: MAKE PIERCE; MODEL ENFORCER

TITLE: 1500-D-500 GAL POLY W/50 GAL FOAM CELL, 145" FDLER (3)XLAYS, DELUGE, BOOSTER REEL, HYD. LADDER RACK

FOR: PORTLAND FIRE & RESCUE, PORTLAND, OREGON

DWG NO.: 31377AD

Pierce MANUFACTURING INC.

JOB NO.	31377
SCALE	1:24
DATE	
DRAWN BY	AMI 30JUN17
CHECKED BY	SMA 30JUN17
SHEET SIZE	D
SHEET NO.	1 OF 1

View File Created 22-DEC-2017 10:48:25