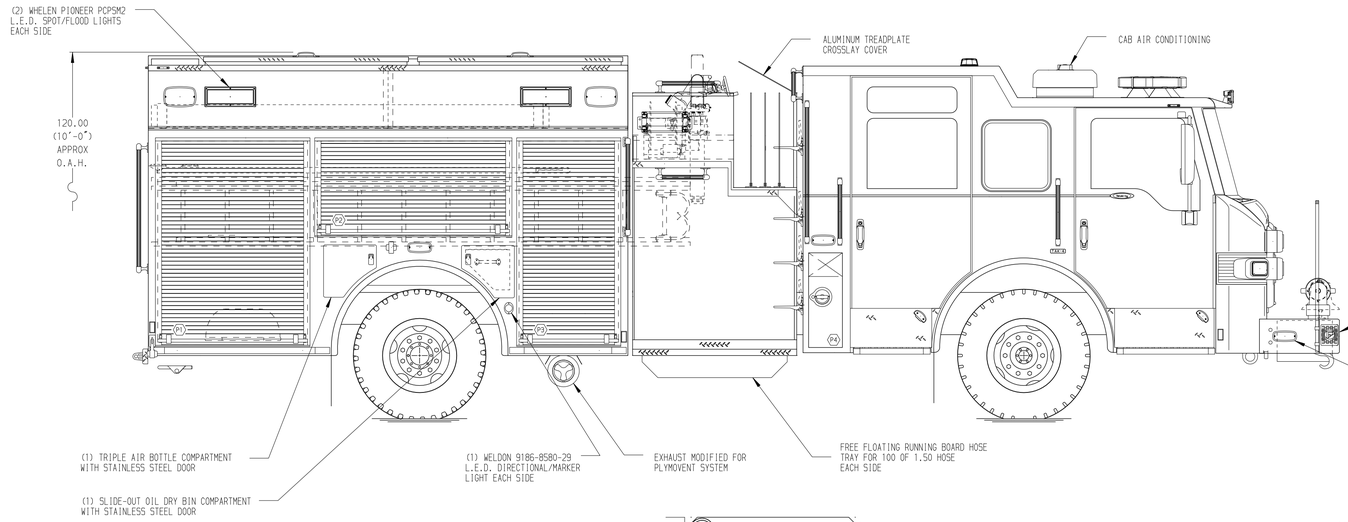

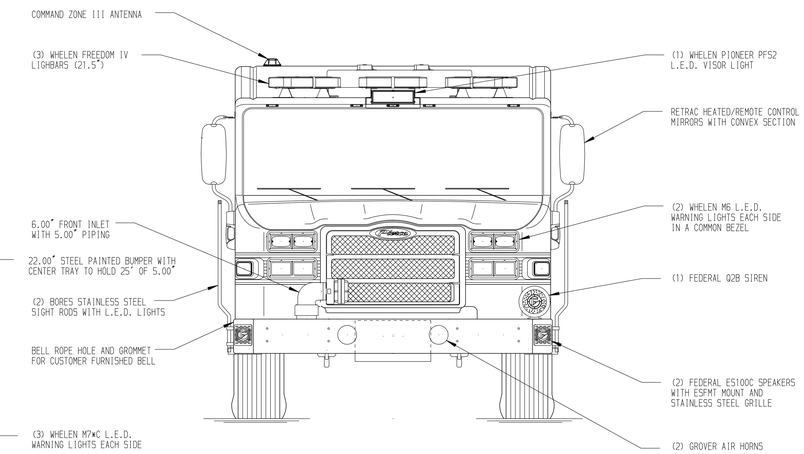

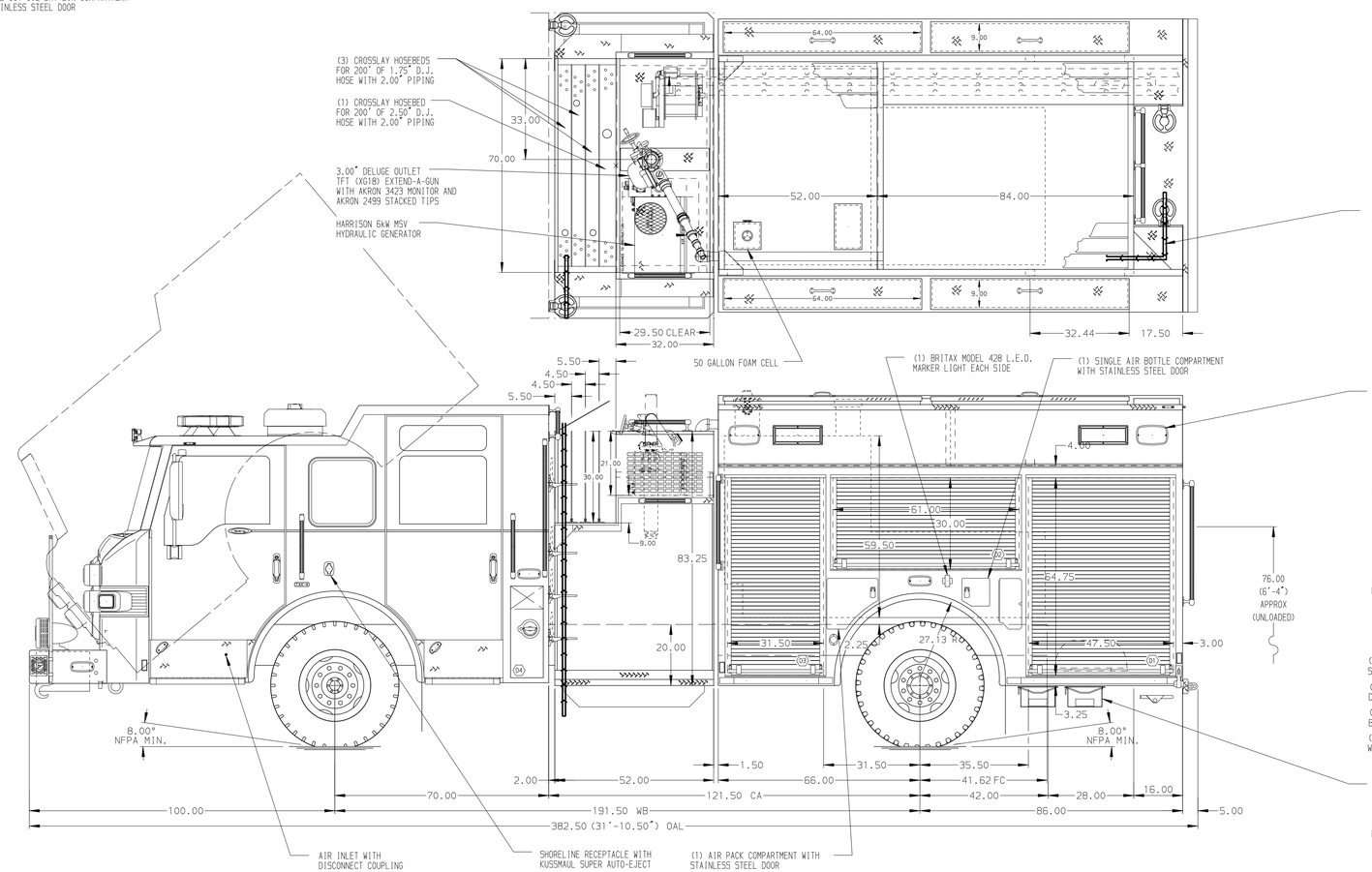

HOSEBED CAPACITIES

1. 300' OF 2.50" D.J. HOSE
2. 300' OF 2.50" D.J. HOSE
3. 1200' OF 5.00" LDH TPX RUBBER HSOE
4. 400' OF 1.75" D.J. HOSE

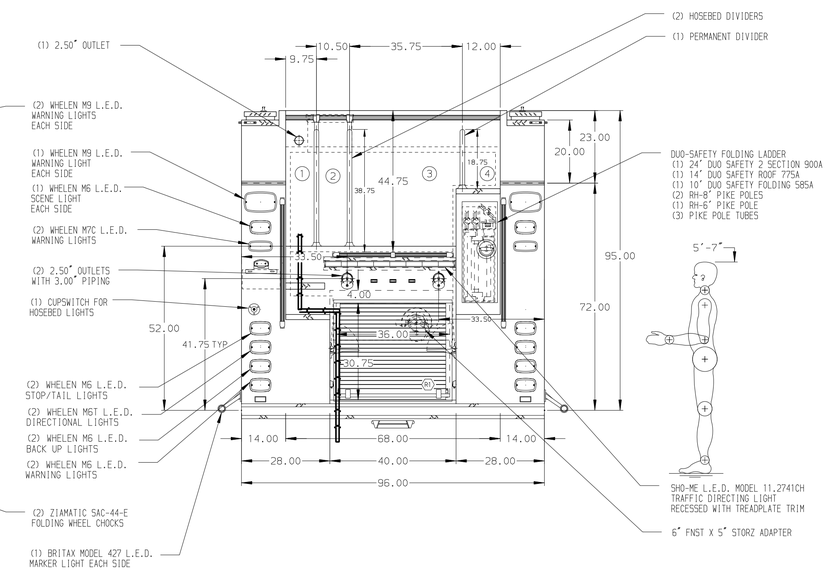

ALUMINUM BODY

NOTE

DIMENSIONS SHOWN ARE APPROXIMATE AND ARE SUBJECT TO MINOR DEVIATIONS AS MAY OCCUR OR BE NECESSARY IN CONSTRUCTION.
MINOR DETAILS NOT SHOWN.

1. BATTERY CHARGER LOCATED IN COMPARTMENT D3
2. BATTERY CHARGE INDICATOR MOUNTED BEHIND DRIVER SIDE CAB SEAT
3. DUAL L.E.D. LIGHT STRIPS LOCATED IN HOSE BED
4. ONE ADJUSTABLE FULL WIDTH/DEPTH SHELF IN COMPARTMENT D1, D3, P1, & P2
5. TWO FLOOR MOUNTED SLIDE-OUT TRAY IN COMPARTMENT D1, D3, P1, P3 & R1
6. SWING-OUT TOOL BOARD WITH PEGBOARD PATTERN IN COMPARTMENT D2
7. PARTITION BETWEEN COMPARTMENTS D1/R1 AND P1/R1
8. AIR BOTTLE STORAGE BIN LOCATED IN COMPARTMENT P1 FOR (5) AIR BOTTLES
9. AKRON EDUCTOR SINGLE AGENT FOAM SYSTEM
10. CIRCUIT BREAKER PANEL IN COMPARTMENT D3
11. ONE HANNAY ELECTRIC REWIND CORD REEL MODEL 1618-17-18 WITH 200' OF 10/3 CABLE
12. STOKES BASKET (10" X 86" X 24") ON FLOOR OF TRANSVERSE COMPARTMENT D1, P1, & R1
13. POLY TOOL BOX LOCATED IN COMPARTMENT D1 & P1

REV	DATE	BY	CH
7	14NOV17	MMF	DTS
6	18OCT17	MMF	DTS
5	09AUG17	AMI	CSH

CHASSIS DATA
MAKE: PIERCE
MODEL: VELOCITY

Pierce MANUFACTURING INC.

TITLE: 2000-D-750P 700 GAL WATER W/50 GAL FOAM CELL 152" FH FDLER BODY, (4) XLAYS, LADDERS BESIDE TANK
FOR: LYNDHURST FIRE DEPARTMENT LYNDHURST, NEW JERSEY
DWG NO.: 31431AD

JOB NO.	31431
SCALE	1:24
DATE	
DRAWN BY	AMI 01AUG17
CHECKED BY	CSH 01AUG17
SHEET SIZE	D
SHEET NO.	1 OF 1

View File Created 14-NOV-2017 07:17:46