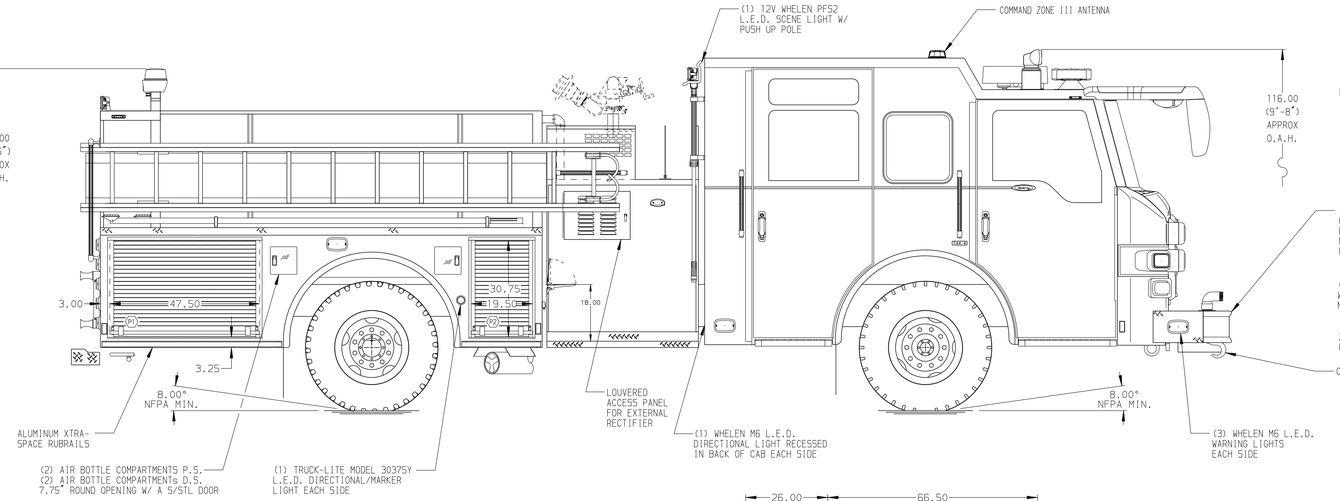

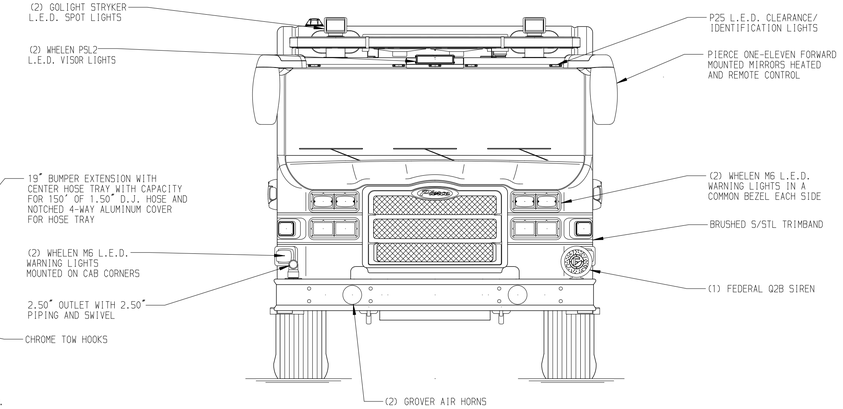

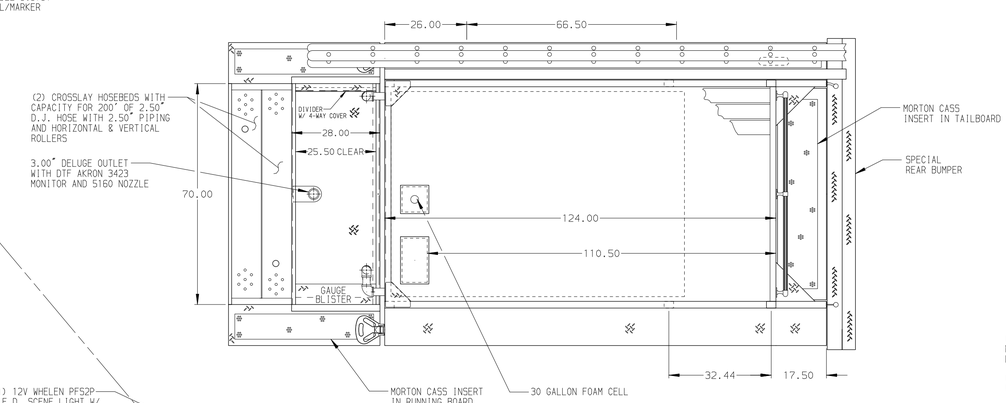

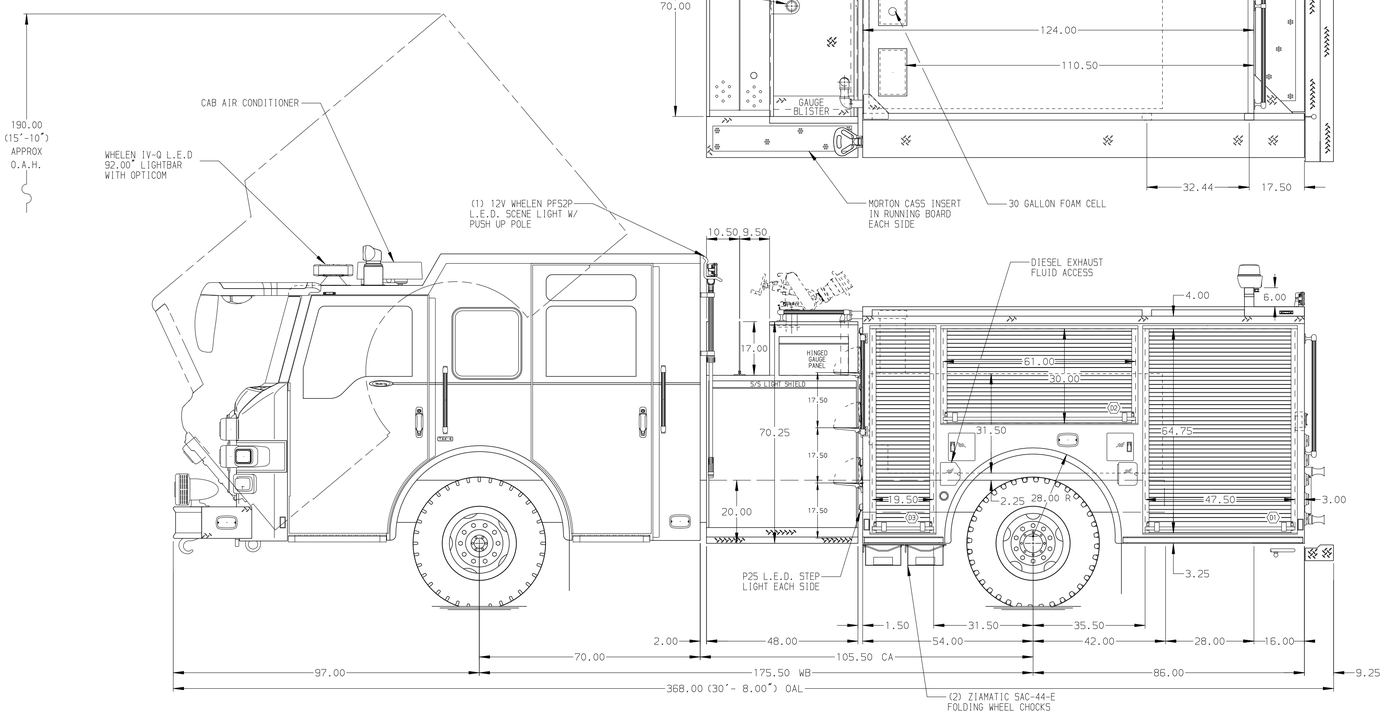

HOSEBED CAPACITIES

1. 300' OF 1.75" D.J. HOSE
2. 500' OF 2.50" D.J. HOSE
3. 500' OF 2.50" D.J. HOSE
4. 500' OF 2.50" D.J. HOSE
5. 300' OF 1.75" D.J. HOSE

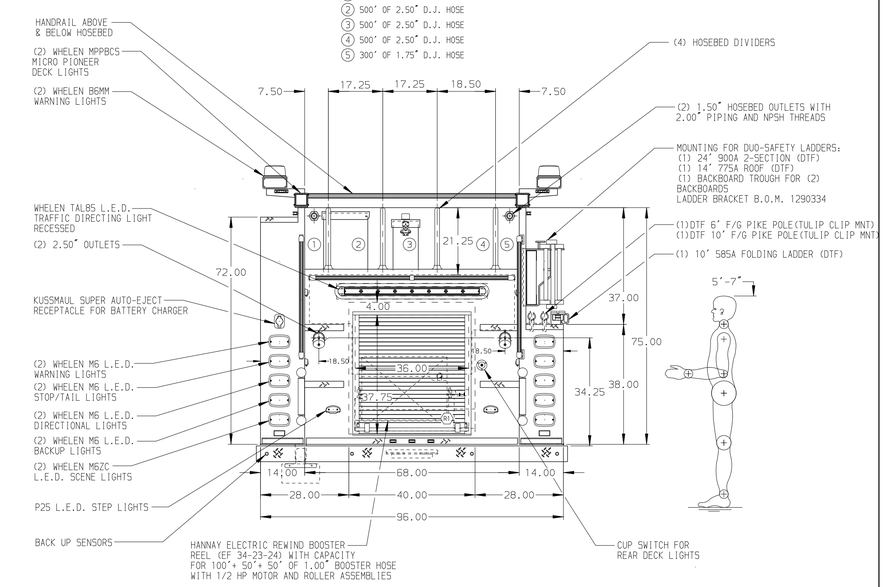

ALUMINUM BODY | SIDE ROLL & FRONTAL IMPACT PROTECTION | O.A.L. TARGET 372.25"

NOTE

DIMENSIONS SHOWN ARE APPROXIMATE AND ARE SUBJECT TO MINOR DEVIATIONS AS MAY OCCUR OR BE NECESSARY IN CONSTRUCTION.
MINOR DETAILS NOT SHOWN.

1. RUD AUTOMATIC TIRE CHAINS TO BE PROVIDED AT REAR
2. AIR INLET WITH DISCONNECT FITTING LOCATED IN DRIVER SIDE STEP WELL
3. AIR OUTLET WITH SHUT OFF VALVE LOCATED IN COMPARTMENT-D3
4. BATTERY CHARGER LOCATED IN COMPARTMENT-D3
5. BATTERY CHARGER INDICATOR LOCATED ON DRIVER SEAT WITH BRACKET
6. ON SCENE SOLUTIONS L.E.D. LIGHT STRIPS IN ALL COMPARTMENTS
7. SHELF TRACKS LOCATED IN COMPARTMENTS D1 & P1
8. 500 LB. FULL WIDTH/DEPTH ADJUSTABLE SHELVES IN COMPARTMENT-ONE IN P1;TWO IN D1
9. REMOVABLE ACCESS PANEL WITH 1/4 TURN FASTENERS IN COMPARTMENT-D3
10. PARTITION BETWEEN COMPARTMENTS D1/R1 AND P1/R1
11. ONE AIR BOTTLE MOUNTING TRACK HOLDER IN COMPARTMENT-D2
12. AKRON EDUCTOR SINGLE AGENT FOAM SYSTEM
13. ONE 6-PLACE RECEPTACLE STRIP LOCATED IN CAB

REV	DATE	BY	CH
5	03OCT17	JWO	LPA
4	29AUG17	JWO	LPA
3	20JUL17	JWO	JBL

CHASSIS DATA
MAKE: PIERCE
MODEL: VELOCITY FR

Pierce MANUFACTURING INC.

TITLE: 1500-D-500P 140 BODY F.HT.,FRT & REAR-DS,LOW-PS BOOSTER REEL,30G FOAM CELL
FOR: DENVER FIRE DEPARTMENT, DENVER, COLORADO
DWG NO.: 31434AD

JOB NO.	SCALE	DRAWN BY	DATE	CHECKED BY	DATE	SHEET SIZE	SHEET NO.
31434 01-03	1:24	JWO	28JUN17	JBL	10JUL17	D	1 OF 1

View File Created 04-OCT-2017 12:43:15