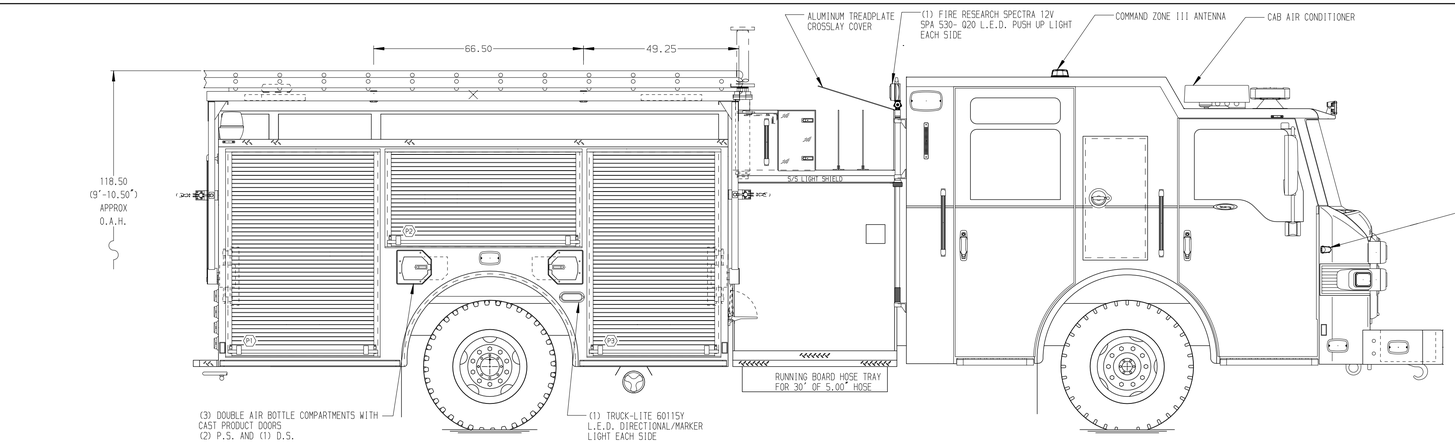

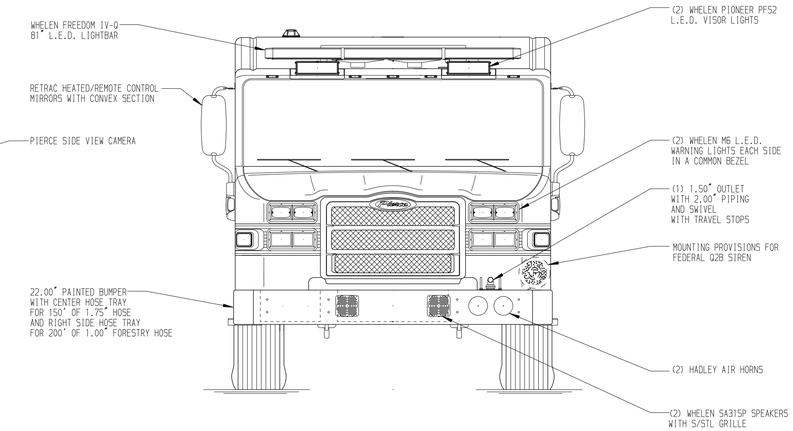

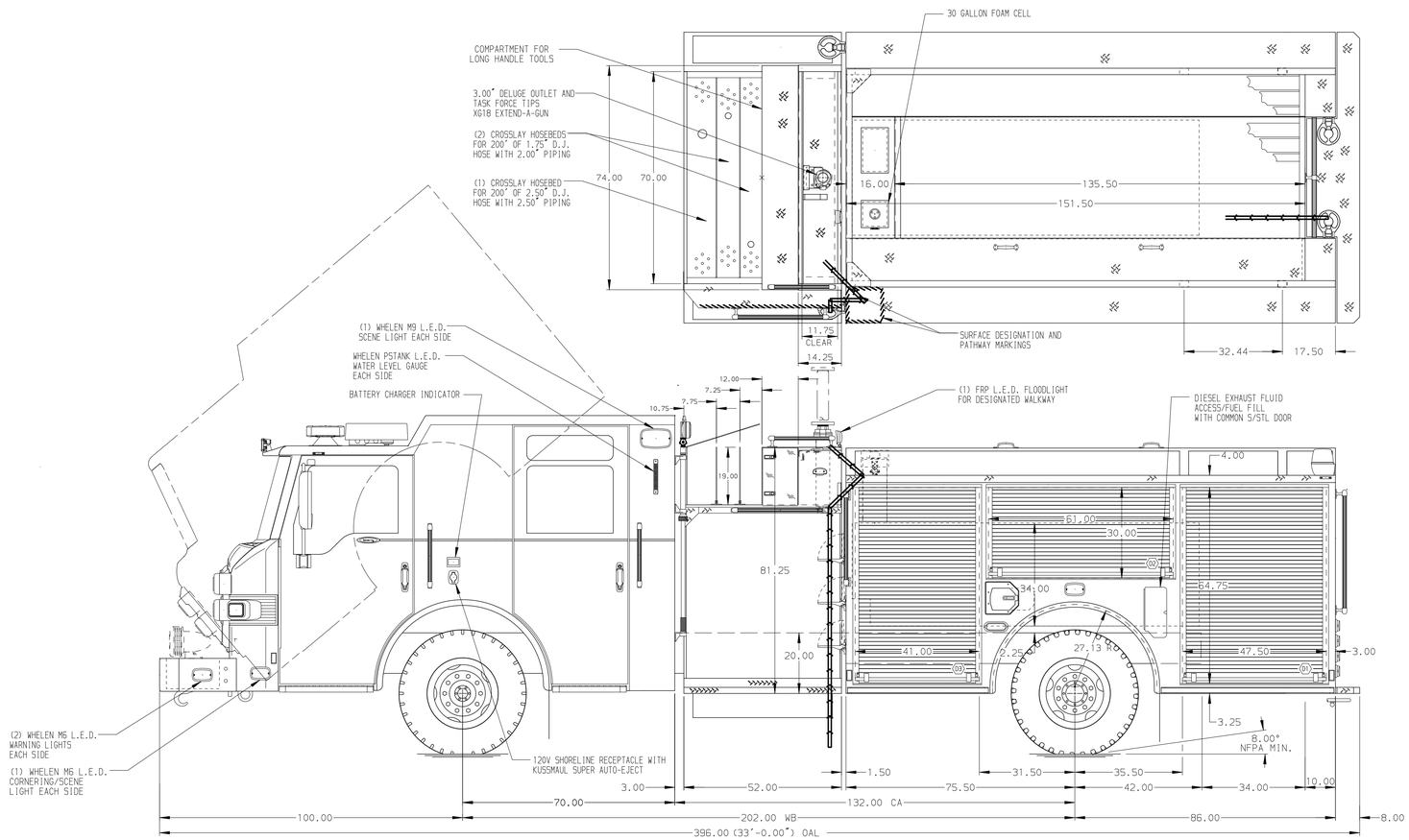

HOSEBED CAPACITIES

1. 1000' OF 5.00" D.J. POLY HOSE
2. 200' OF 3.00" D.J. POLY HOSE
3. 300' OF 1.75" D.J. POLY HOSE

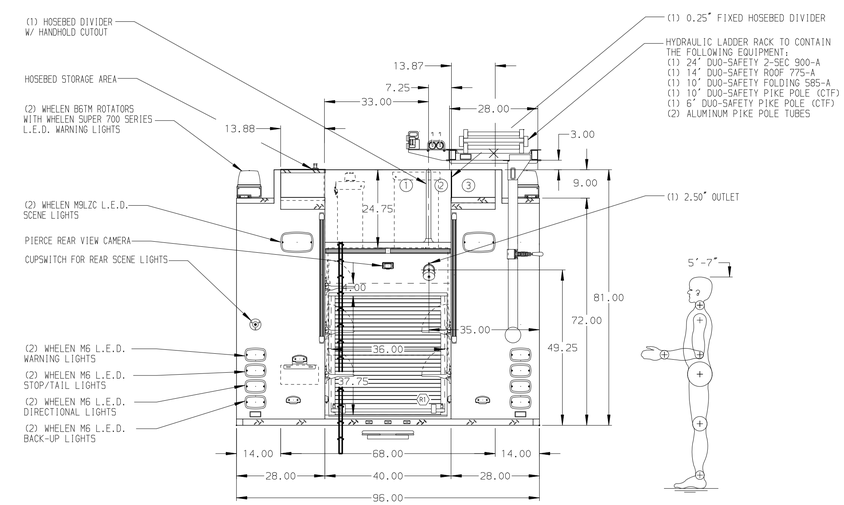

ALUMINUM BODY

NOTE

DIMENSIONS SHOWN ARE APPROXIMATE AND ARE SUBJECT TO MINOR DEVIATIONS AS MAY OCCUR OR BE NECESSARY IN CONSTRUCTION.
MINOR DETAILS NOT SHOWN.

1. WHEEL CHOCKS AND BRACKETS (CTF)
2. AIR INLET/OUTLET WITH DISCONNECT FITTING IN D.S. STEP WELL
3. BATTERY CHARGER LOCATED IN D3
4. ADJUSTABLE FULL WIDTH/ DEPTH SHELVES TWO IN D1, D3, AND P1 AND ONE IN P2 AND P3
5. ONE ADJUSTABLE TILTING SLIDE-OUT TRAY IN P3
6. ONE FLOOR MOUNTED UTILITY ONE WAY SLIDE-OUT TRAY IN D1 AND P3
7. SWING-OUT TOOL GRID SYSTEM IN D2
8. PARTITION BETWEEN COMPARTMENTS D1/R1 AND P1/R1
9. ONE VERTICAL DIVIDER IN COMPARTMENT ABOVE PUMP

REV	DATE	BY	CH
3	13NOV17	LST	JGO
2	26OCT17	LST	JGO

CHASSIS DATA	
MAKE	PIERCE
MODEL	VELOCITY

Pierce MANUFACTURING INC.

TITLE	1500-D-530P, 500 GAL OF WATER W/ 30 GAL FOAM CELL 161" FHFD, (3) X-LAYS, HYDRAULIC LADDER RACK, DELUGE
FOR	CITY OF AUSTELL AUSTELL, GEORGIA
DWG NO.	31472AD

JOB NO.	31472
SCALE	1:24
DATE	
DRAWN BY	LST 21JUL17
CHECKED BY	CCA 25JUL17
SHEET SIZE	D
SHEET NO.	1 OF 1

View File Created 15-NOV-2017 07:04:58