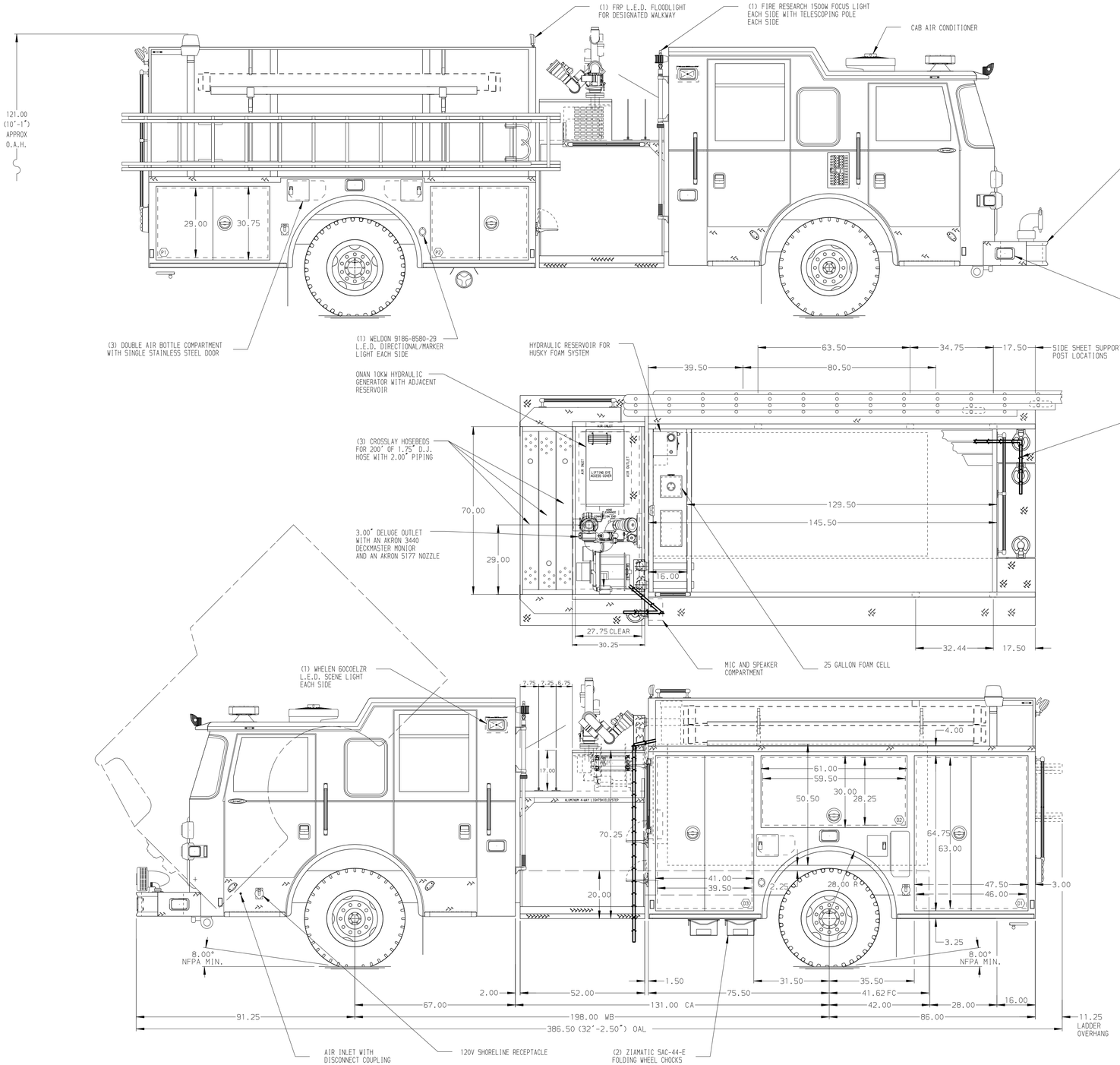

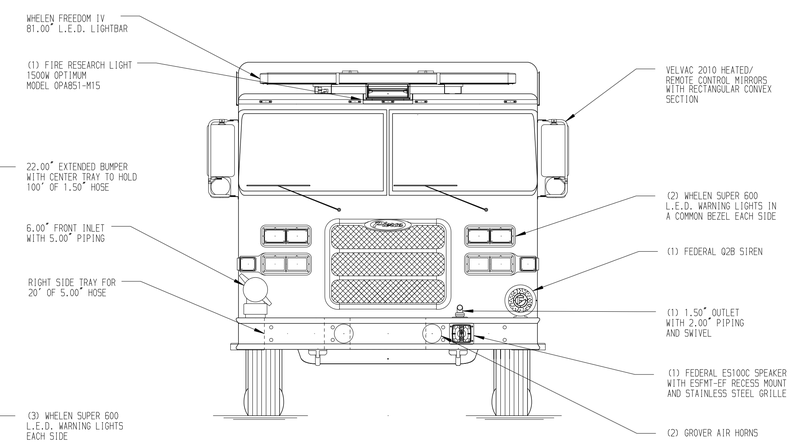

HOSEBED CAPACITIES

1. 220' OF 3.00" D.J. HOSE
2. 220' OF 3.00" D.J. HOSE
3. 1400' OF 5.00" ANGUS HOSE

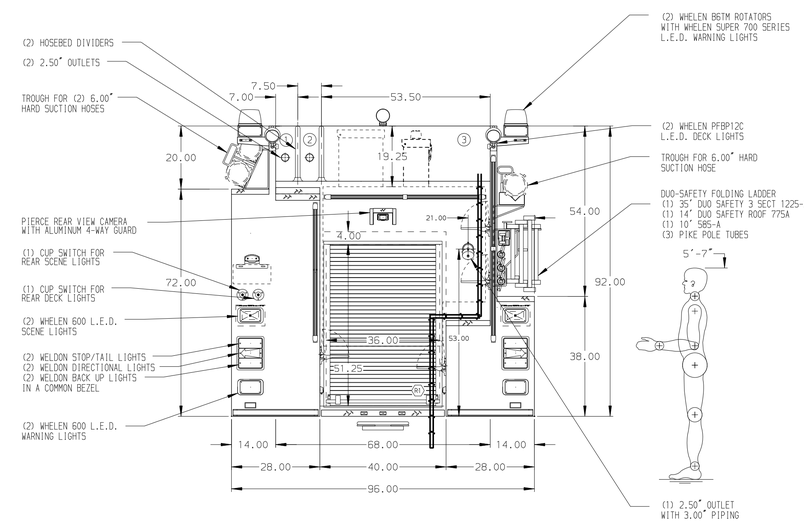

ALUMINUM BODY

SIDE ROLL AND FRONTAL IMPACT PROTECTION

NOTE

DIMENSIONS SHOWN ARE APPROXIMATE AND ARE SUBJECT TO MINOR DEVIATIONS AS MAY OCCUR OR BE NECESSARY IN CONSTRUCTION.
MINOR DETAILS NOT SHOWN.

1. ONSPOT AUTOMATIC TIRE CHAINS TO BE PROVIDED AT REAR
2. BATTERY CHARGER LOCATED IN CREW CAB SEAT RISER
3. BATTERY CHARGE INDICATOR LOCATED NEAR D.S. SEAT RISER WITH BRACKET
4. CIRCUIT BREAKER PANEL IN COMPARTMENT D3
5. ONE HANNAY ELECTRIC REWIND CORD REEL MODEL 1618-17-18 WITH 200' OF 10/4 CABLE LOCATED IN CARGO AREA
6. ONE EXTRUDED PERMANENT HOSEBED DIVIDER SHIPPED LOOSE.

REV	DATE	BY	CH
2	27SEP17	MMF	DTS
1	31AUG17	MMF	DTS

CHASSIS DATA
MAKE: PIERCE
MODEL: ARROW XT

Pierce MANUFACTURING INC.

TITLE: 2000-D-1025P, 1000G WATER W/25G FOAM, 161" BODY (3) XLAYS, DELUGE, GENERATOR, CABLE REEL
FOR: REINHOLDS FIRE COMPANY, REINHOLDS, PENNSYLVANIA
DWG NO.: 31504AD

JOB NO.	31504
SCALE	1:24
DATE	
DRAWN BY	MMF 04AUG17
CHECKED BY	CCA 04AUG17
SHEET SIZE	D
SHEET NO.	1 OF 1

View File Created 28-SEP-2017 07:18:29