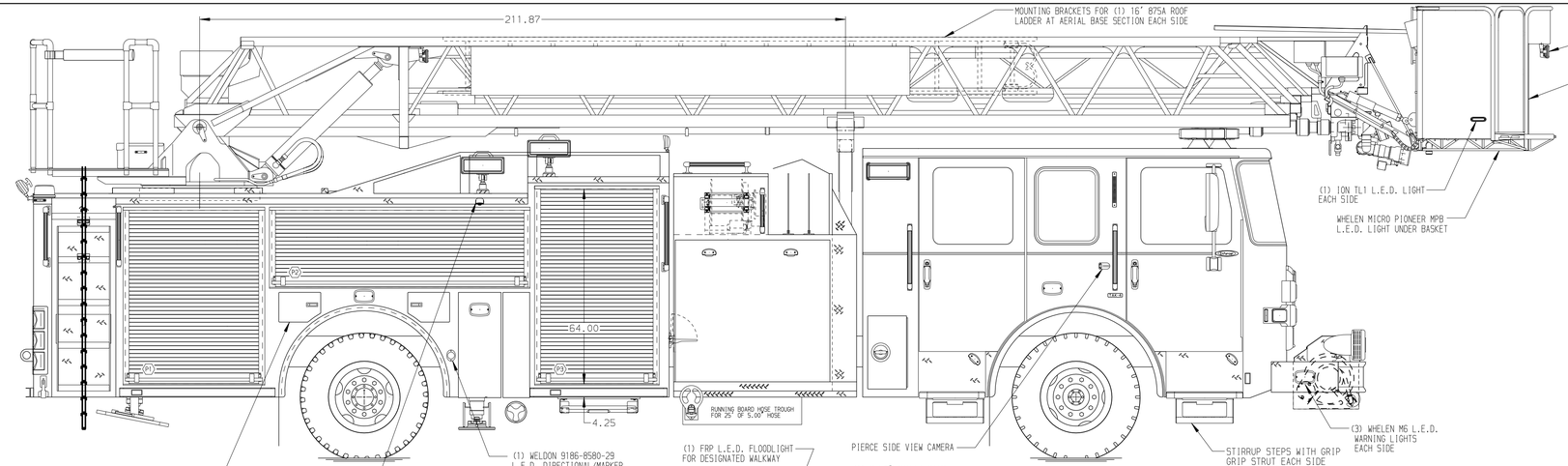


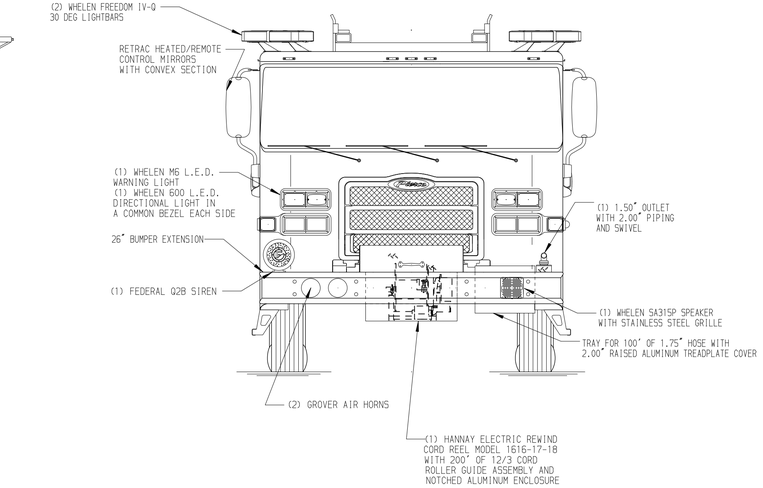


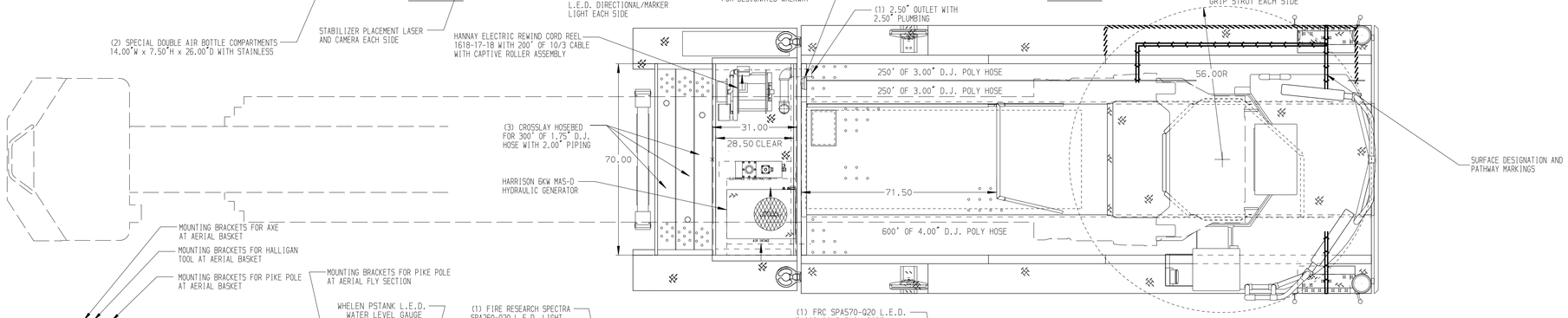


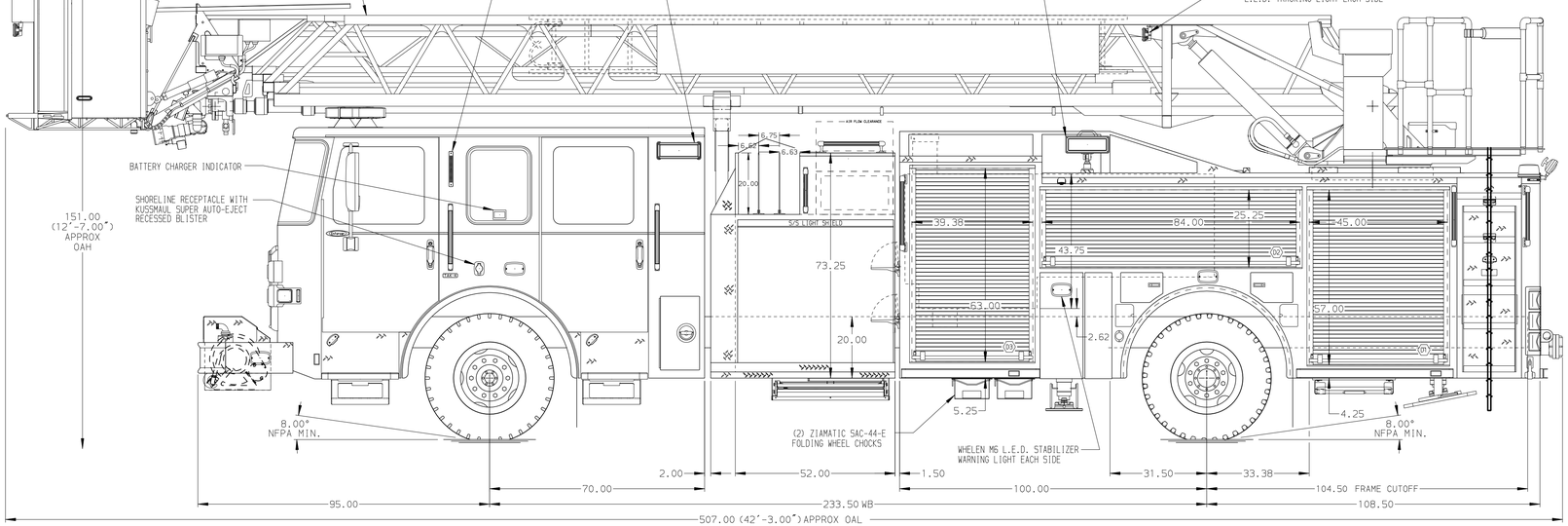


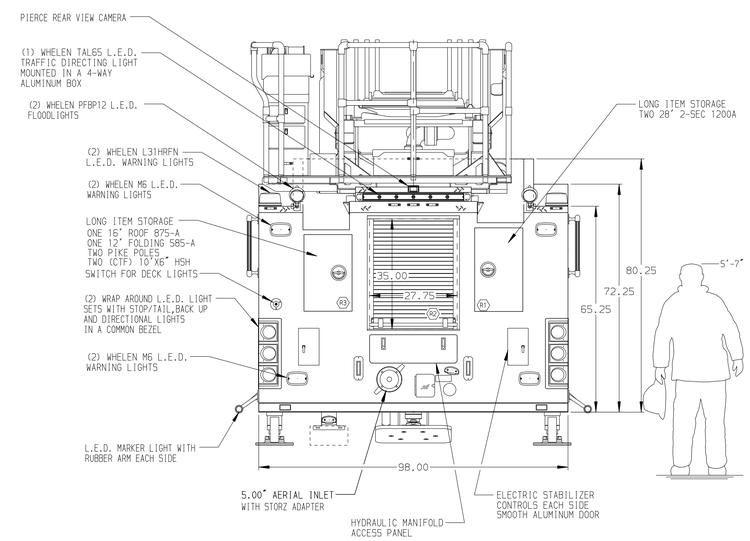


ALUMINUM BODY

NOTE

DIMENSIONS SHOWN ARE APPROXIMATE AND ARE SUBJECT TO MINOR DEVIATIONS AS MAY OCCUR OR BE NECESSARY IN CONSTRUCTION.
MINOR DETAILS NOT SHOWN.

1. 2-WAY INTERCOM SYSTEM BETWEEN AERIAL TIP AND TURNTABLE
2. SHORELINE RECEPTACLE WITH KUSSMAUL SUPER AUTO-EJECT LOCATED ON DRIVER SIDE OF THE CAB
3. TWO ALUMINUM SLIDE-OUT TOOLBOARD IN COMPARTMENT D3
4. BATTERY CHARGER LOCATED IN COMPARTMENT D3
5. BATTERY CHARGE INDICATOR LOCATED ON THE DRIVER SIDE SEAT RISER
6. ONE ADJUSTABLE FULL WIDTH/FULL DEPTH SHELF IN COMPARTMENTS D1, P1 & P3
7. ONE FLOOR MOUNTED SLIDE-OUT TRAY IN COMPARTMENTS D1, P1 & P3
8. NON-RAISED AERIAL PEDESTAL
9. 1500 GPM HIGH FLOW WATERWAY
10. CIRCUIT BREAKER PANEL IN COMPARTMENT D3
11. L.E.D. LIGHTING ON AERIAL LADDER SECTIONS
12. ONE DUPLEX SHORELINE RECEPTACLE BEHIND OFFICER SEAT
13. TRIDENT FOLDING STEPS ON AERIAL DEVICE

| REV | DATE | BY | CH |
|---|---|---|---|
| 3 | 03JAN18 | MWA | - |
| 4 | 04DEC17 | MWA | MSA |
| 5 | 05OCT17 | SVA | PJP |

CHASSIS DATA
MAKE: PIERCE
MODEL: ENFORCER

**Pierce MANUFACTURING INC.**

TITLE: 110' ASCENDANT AERAIL PLATFORM AND BODY ASSEMBLY
500 GALLON WATER TANK

FOR: FRANKLINVILLE FIRE DISTRICT
FRANKLINVILLE, NY

DWG NO. 31542AD

| JOB NO. | 31542 |
|---|---|
| SCALE | 1:24 |
| DATE | |
| DRAWN BY | SVA |
| | 25SEP17 |
| CHECKED BY | CRI |
| | 27SEP17 |
| SHEET SIZE | D |
| SHEET NO. | 1 OF 1 |

View File Created 08-JAN-2018 07:23:44