PUMPER

BODY
Medium Aluminum 2nd Gen Pumper

CHASSIS
Enforcer Chassis

CHASSIS

AXLE,FRONT,CUSTOM
19,500 Lb TAK-4 Axle

AXLE,REAR
24,000 Lb Dana Axle

ENGINE
450 HP Cummins L9 Engine

TRANSMISSION
Allison 5th Gen, 3000 EVS P

BUMPER
19" Extended Stainless Steel

CAB
7010 Enforcer Cab

BODY

WATER TANK
500 Gallon New York Style Water Tank

COMPT,PUMPER,REAR
30.75" FF RollUp Rear Compt

COMPT,PUMPER,DRIVER SIDE
152" Lap Full Height Front & Rear FDLER

COMPT,PUMPER PASS. SIDE
152" Lap Full Height Front & Rear FDLER

FIRE SUPPRESSION

PUMPHOUSE
45" Control Zone Side Mount

PUMP
1500 GPM Waterous CSU

CROSSLAYS,1.50"
(2) 1.50" Standard Capacity

CROSSLAYS,2.50"
2.50" Crosslay Not Required

SPEEDLAYS
Speedlays Not Required

GENERATOR
Generator Not Required

Foam System
Foam System Not Required

Foam Cell
Foam Cell Not Required

Side Roll and Frontal Impact Protection

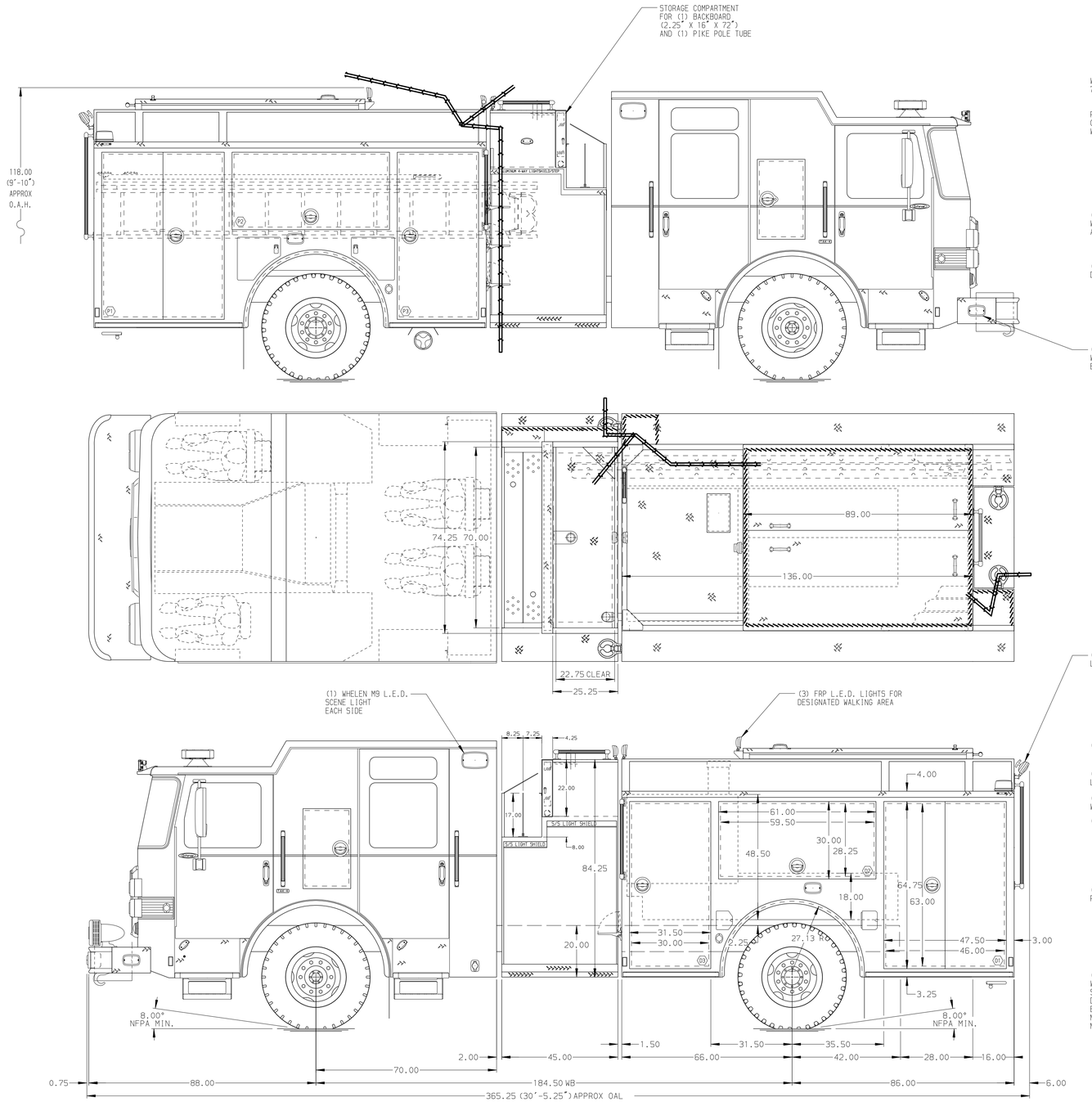

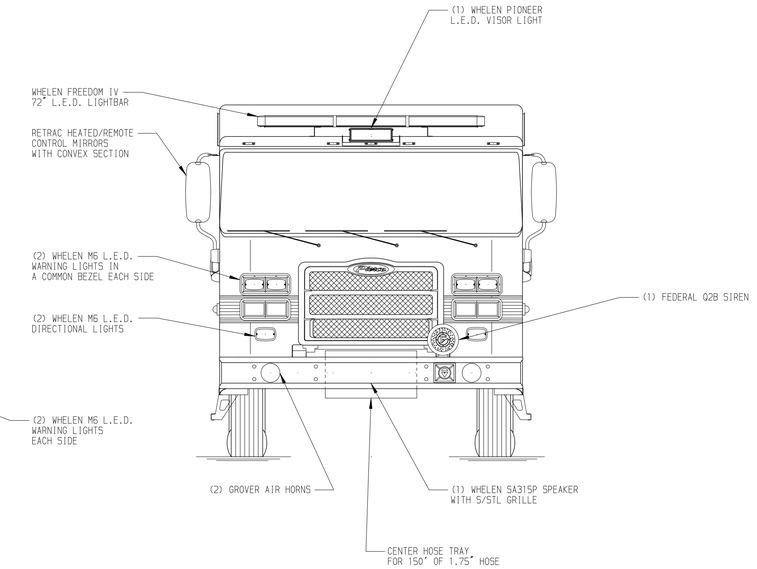

HOSEBED CAPACITY

BED 1
200' OF 2.50" D.J. POLY HOSE

BED 2
1000' OF 5.00" D.J. POLY HOSE

BED 3
300' OF 2.50" D.J. POLY HOSE

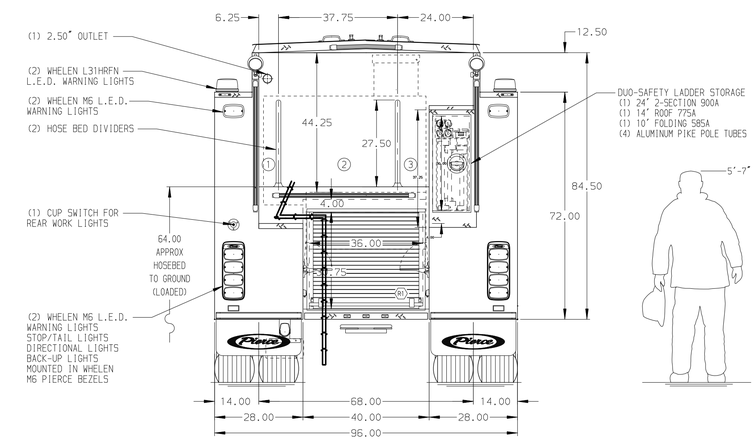

NOTE

DIMENSIONS SHOWN ARE APPROXIMATE AND ARE SUBJECT TO MINOR DEVIATIONS AS MAY OCCUR OR BE NECESSARY IN CONSTRUCTION.
MINOR DETAILS NOT SHOWN.

1. ONE 1.50 OUTLET WITH 2.00 PIPING AND SWIVEL LOCATED IN CENTER BUMPER TRAY
2. SHORELINE RECEPTACLE WITH KUSSMAUL SUPER AUTO-EJECT LOCATED ON DRIVER SIDE OF THE CAB
3. AIR INLET WITH DISCONNECT COUPLING IN THE DRIVER SIDE STEPWELL
4. BATTERY CHARGER LOCATED IN COMPARTMENT D3
5. BATTERY CHARGE INDICATOR LOCATED ON THE DRIVER SIDE SEAT RISER
6. NINE ADJUSTABLE SHELVES LOCATED PER SHOP ORDER
7. TWO FLOOR MOUNTED SLIDE-OUT TRAYS LOCATED PER SHOP ORDER
8. ONE SWING-OUT TOOLBOARD LOCATED PER SHOP ORDER

REV	DATE	BY	CH
2	270CT17	COL	KBO
1	15SEP17	COL	KBO

CHASSIS DATA
MAKE: PIERCE
MODEL: ENFORCER

Pierce MANUFACTURING INC.

TITLE: Pierce Pumper Approval Drawing
FOR: East Moline Fire Department
DWG NO.: 31569AD

JOB NO. 31569
SCALE 1:24
DATE
DRAWN BY COL 23MAY17
CHECKED BY JCO 24MAY17
SHEET SIZE D
SHEET NO. 1 OF 1

View File Created 01-NOV-2017 12:58:23