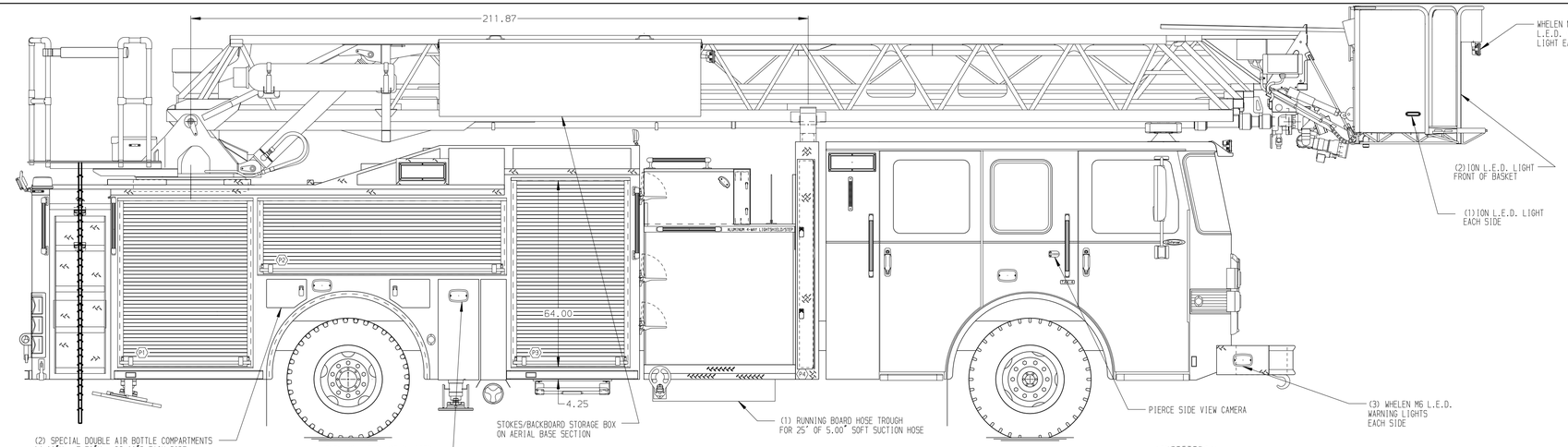

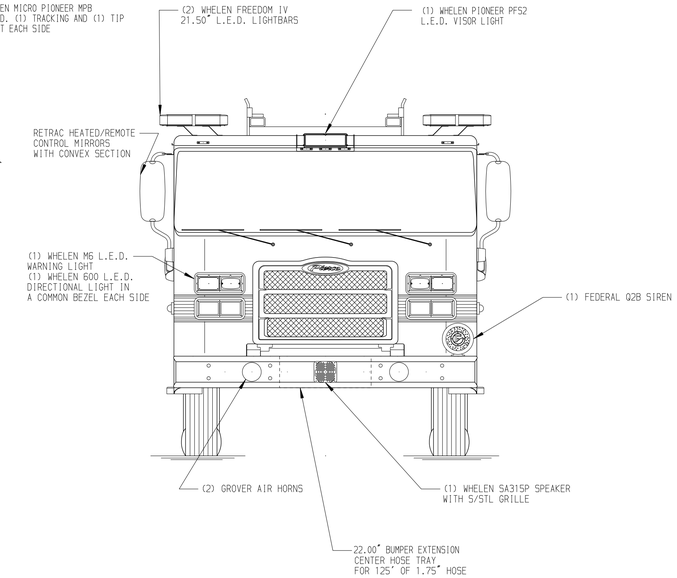

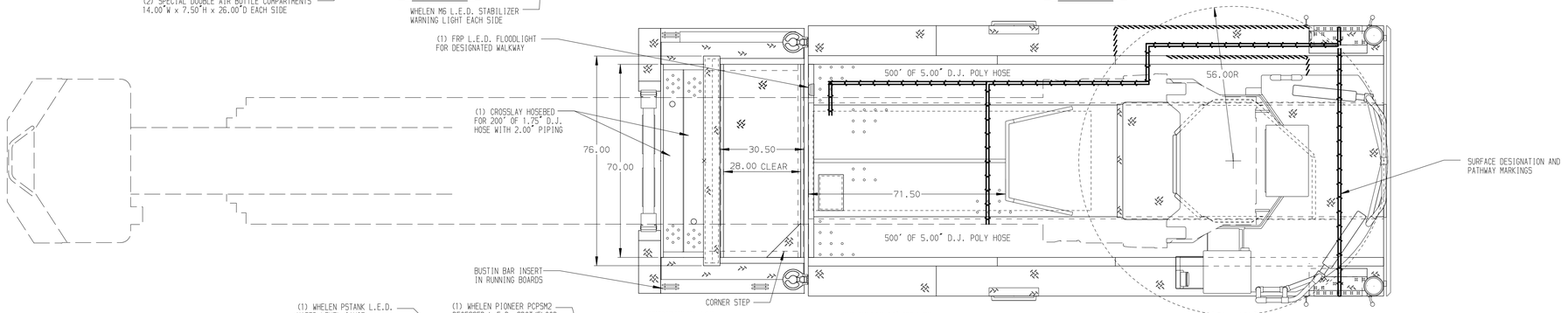

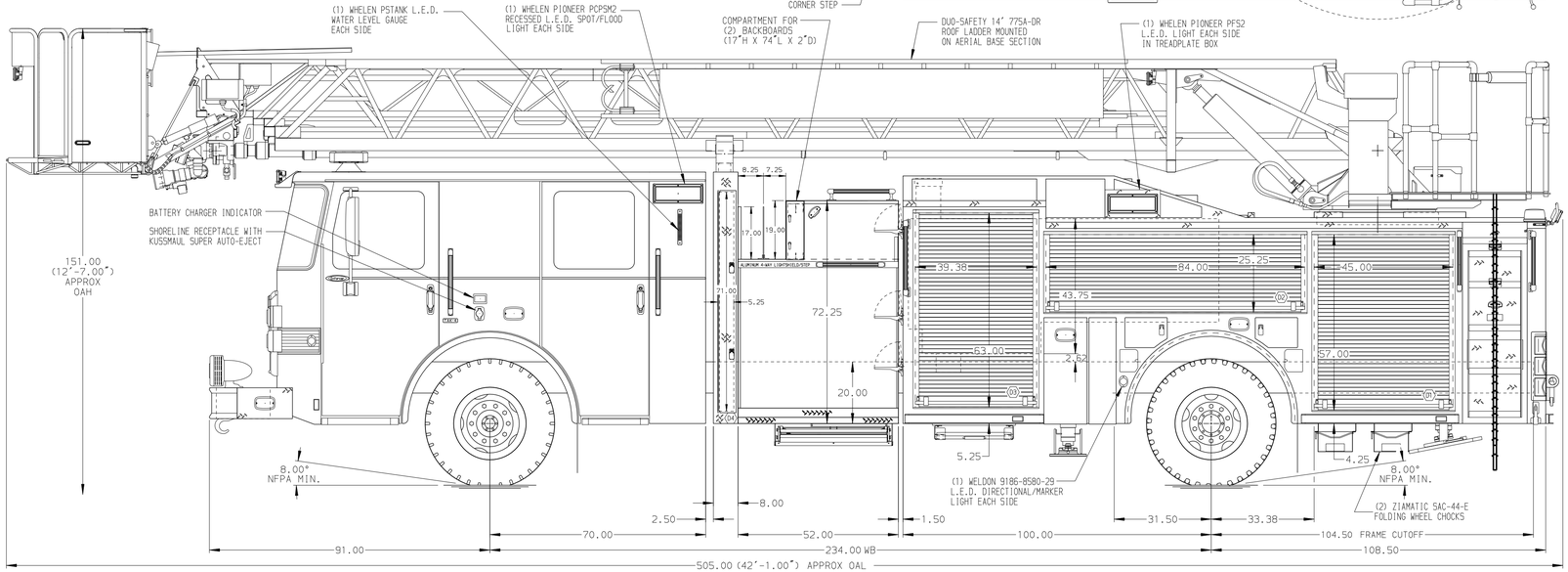

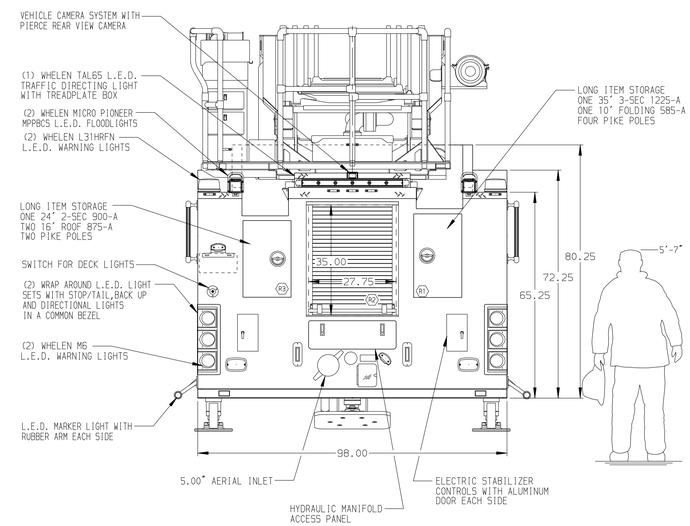

ALUMINUM BODY

SIDE ROLL AND FRONTAL IMPACT PROTECTION

NOTE

DIMENSIONS SHOWN ARE APPROXIMATE AND ARE SUBJECT TO MINOR DEVIATIONS AS MAY OCCUR OR BE NECESSARY IN CONSTRUCTION.
MINOR DETAILS NOT SHOWN.

1. ONE 1.50 OUTLET WITH 2.00 PIPING AND SWIVEL LOCATED IN CENTER BUMPER TRAY
2. SHORELINE RECEPTACLE WITH KUSSMAUL SUPER AUTO-EJECT LOCATED ON DRIVER SIDE OF THE CAB
3. AIR INLET WITH DISCONNECT COUPLING IN THE DRIVER SIDE STEPWELL
4. BATTERY CHARGER LOCATED BEHIND DRIVER SEAT
5. BATTERY CHARGE INDICATOR LOCATED ON THE DRIVER SIDE SEAT RISER
6. SIX ADJUSTABLE SHELVES IN COMPARTMENTS PER SHOP ORDER
7. FOUR FLOOR MOUNTED SLIDE-OUT TRAYS IN COMPARTMENTS PER SHOP ORDER
8. TWO ALUMINUM PEGBOARD WITH TRACKS ON THE REAR WALL OF COMPARTMENTS PER SHOP ORDER
9. NON-RAISED AERIAL PEDESTAL
10. L.E.D. LIGHTING ON AERIAL LADDER SECTIONS
11. 2-WAY INTERCOM SYSTEM BETWEEN AERIAL TIP AND TURNTABLE
12. BREATHING AIR TO TIP
13. 1250 GPM HIGH FLOW WATERWAY

REV	DATE	BY	CH
3	03NOV17	TKA	THS
2	23OCT17	TKA	THS
1	28JUL17	SVA	THS

CHASSIS DATA
MAKE: PIERCE
MODEL: ENFORCER

Pierce MANUFACTURING INC.

TITLE: 110' ASCENDANT AERIAL PLATFORM AND BODY ASSEMBLY 500 GALLON TANK
FOR: INDIAN RIVER COUNTY VERO BEACH, FL
DWG NO.: 31580AD

JOB NO.	31580
SCALE	1:24
DATE	
DRAWN BY	SVA 14JUL17
CHECKED BY	GRM 18JUL17
SHEET SIZE	D
SHEET NO.	1 OF 1

View File Created 13-NOV-2017 13:43:52