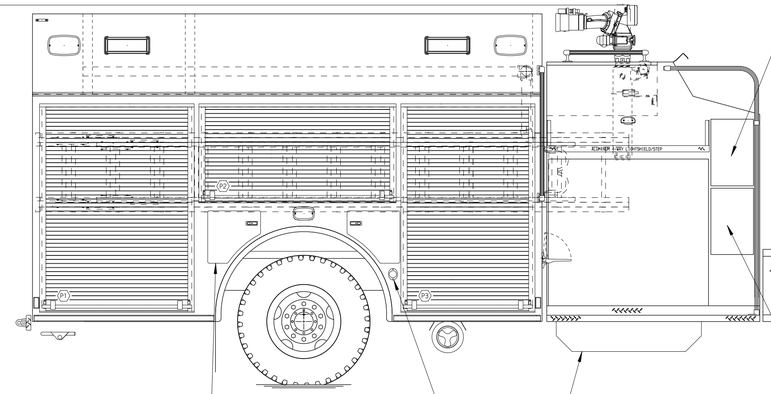

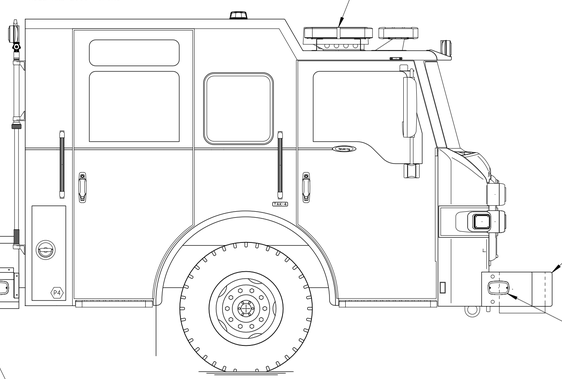

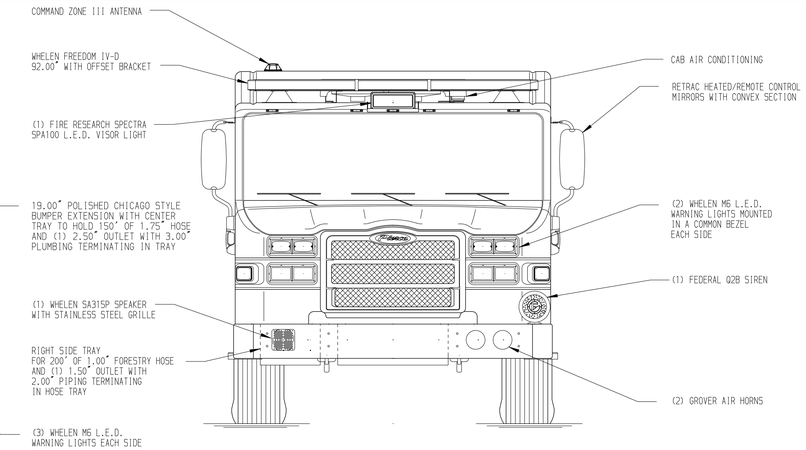

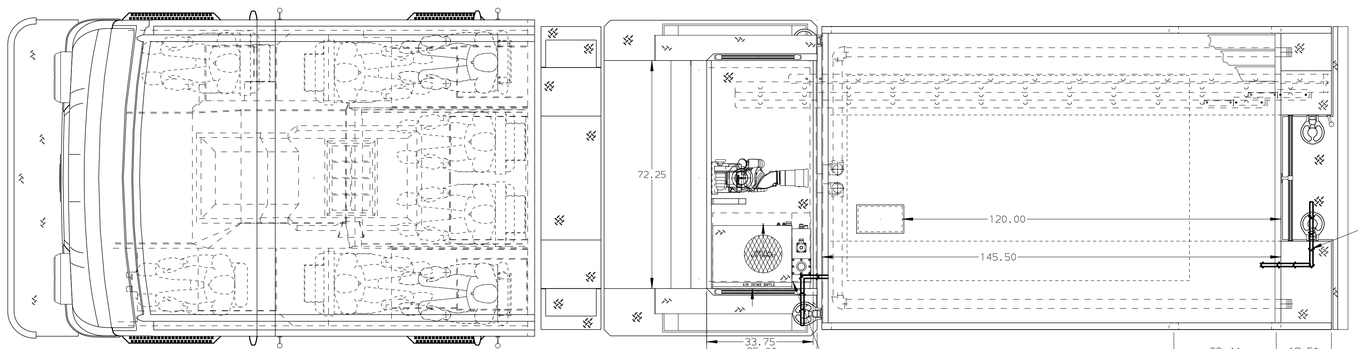

SURFACE DESIGNATION AND PATHWAY MARKINGS

HOSEBED CAPACITIES

1. 600' OF 1.75" D.J. HOSE
2. 200' OF 2.50" D.J. HOSE
3. 1500' OF 5.00" D.J. HOSE
4. 200' OF 2.50" D.J. HOSE

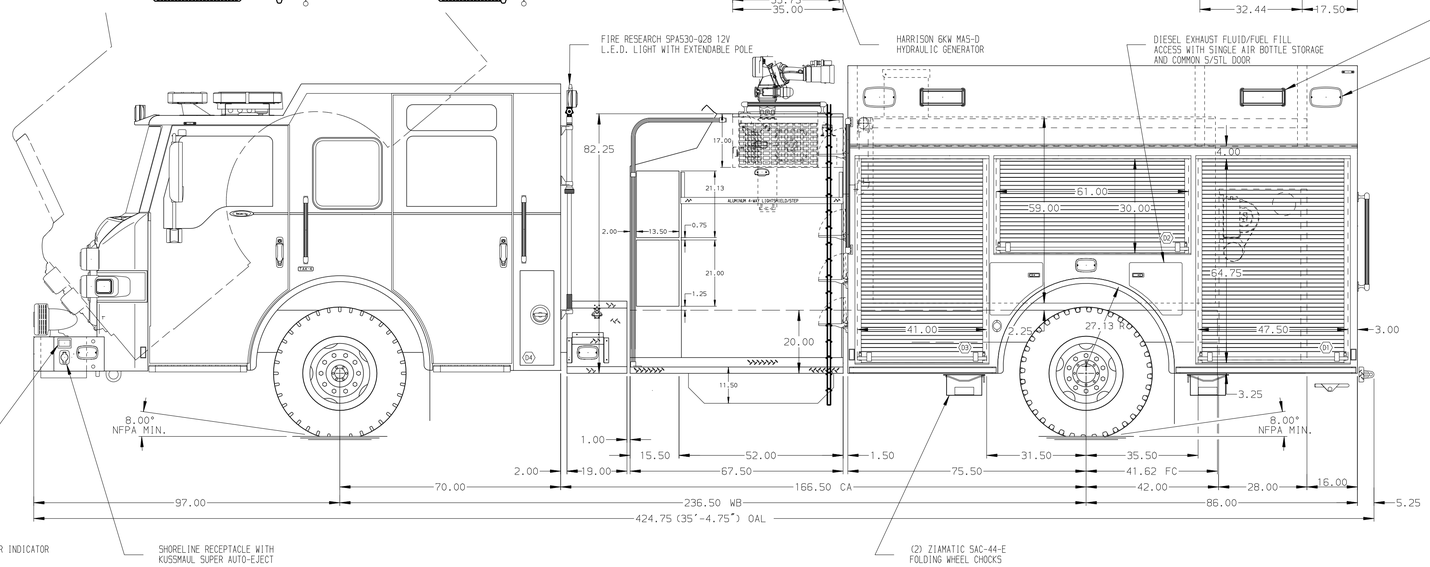

ALUMINUM BODY

(2) FIRE RESEARCH SPECTRA SPA260-Q20 12V L.E.D. SCENE LIGHT EACH SIDE

(2) WHELEN M9 L.E.D. WARNING LIGHTS EACH SIDE

(2) 2.50" OUTLETS WITH 3.00" PIPING

COMPARTMENT FOR:
(2) 6.00" CORRUGATED PVC 12.00' HARD SUCTION HOSE

(2) WHELEN M9 L.E.D. WARNING LIGHTS

(2) FIRE RESEARCH SPA900-Q70 L.E.D. SCENE LIGHTS

(1) CUP SWITCH FOR HOSEBED LIGHTS

(2) WHELEN M6 L.E.D. WARNING LIGHTS

(2) WHELEN M6 L.E.D. STOP/TAIL LIGHTS

(2) WHELEN M6 L.E.D. DIRECTIONAL LIGHTS

(2) WHELEN M6 L.E.D. BACK-UP LIGHTS

LIGHTS MOUNTED IN WHELEN M6 "PIERCE" BEZELS

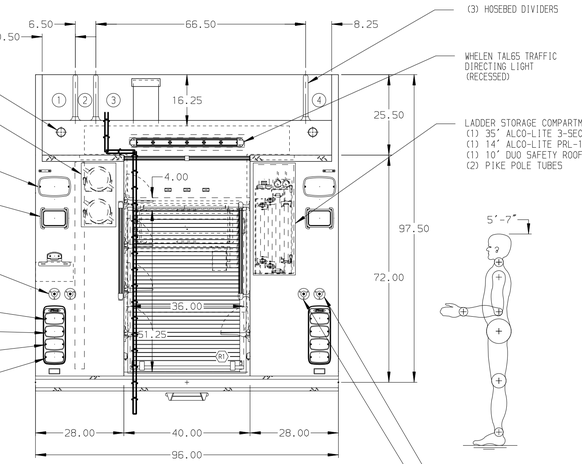

NOTE

DIMENSIONS SHOWN ARE APPROXIMATE AND ARE SUBJECT TO MINOR DEVIATIONS AS MAY OCCUR OR BE NECESSARY IN CONSTRUCTION.
MINOR DETAILS NOT SHOWN.

1. AIR OUTLET WITH SHUT-OFF VALVE LOCATED DS PUMP PANEL
2. AIR INLET WIH DISCONNECT COUPLING LOCATED DS STEP WELL
3. BATTERY CHARGER LOCATED BEHIND DRIVER'S SEAT
4. TWO ADJUSTABLE SLIDE-OUT TRAYS IN COMPARTMENT D3
5. ONE ADJUSTABLE TILTING SLIDE-OUT TRAY IN COMPARTMENT D2
6. ONE FLOOR MOUNTED SLIDE-OUT TRAY IN COMPARTMENT D1, D3, P1, P3 & R1
7. SWING-OUT TOOL GRID SYSTEM IN COMPARTMENT P2
8. ONE FULL WIDTH/DEPTH SHELF LOCATED IN COMPARTMENT D3 & R1 AND TWO IN D1, P1, & P3
9. CIRCUIT BREAKER PANEL IN COMPARTMENT D3
10. ONE AKRON ELECTRIC CORD REEL (ERWC-10-28) WITH CAPACITY FOR 200' OF 10/3 CABLE LOCATED IN COMPARTMENT R1

REV	DATE	BY	CH
7	18DEC17	MMF	DTS
6	11DEC17	MMF	DTS
5	10NOV17	MMF	DTS
4	31AUG17	MMF	CCA

CHASSIS DATA
MAKE: PIERCE
MODEL: VELOCITY FR

Pierce MANUFACTURING INC.

TITLE: 2000-D-1000 GAL POLY, 161" RESCUE BODY, TOP CONTROL (2) SPEEDLAYS, LADDERS THRU BODY, GENERATOR

FOR: BRIDGEWATER FIRE DISTRICT #1 MARTINSVILLE, NEW JERSEY

DWG NO.: 31588AD

JOB NO.	31588
SCALE	1:24
DATE	
DRAWN BY	MMF 21AUG17
CHECKED BY	CSH 22AUG17
SHEET SIZE	D
SHEET NO.	1 OF 1

View File Created 19-DEC-2017 08:03:42