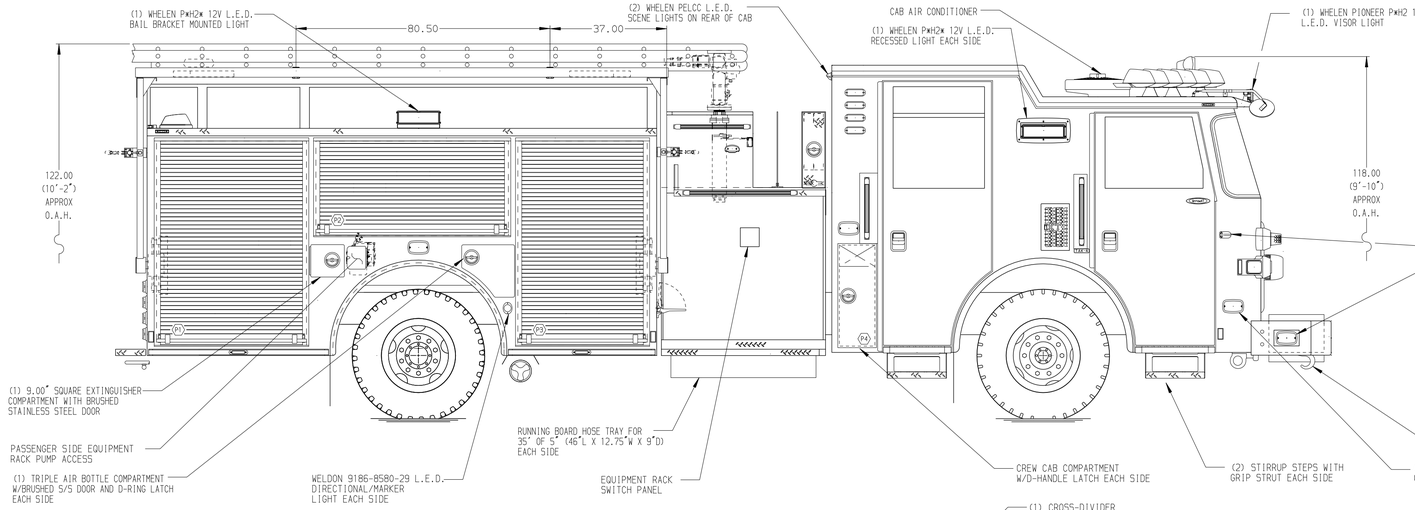

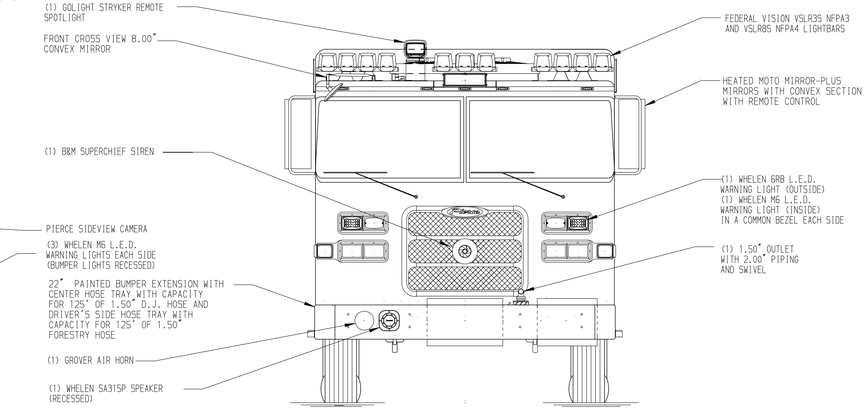

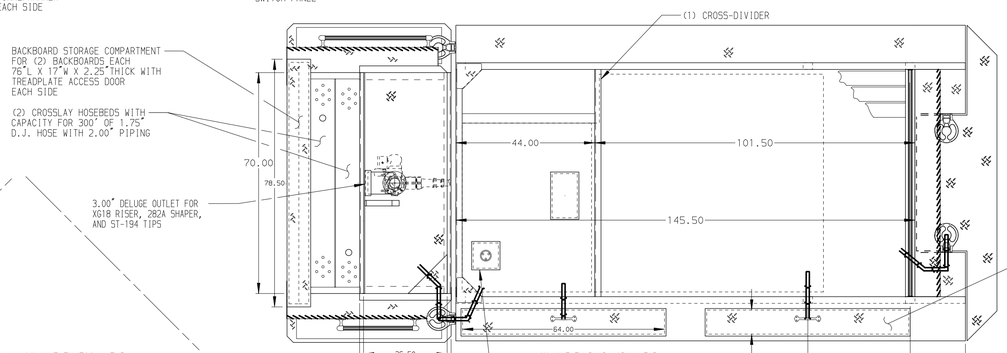

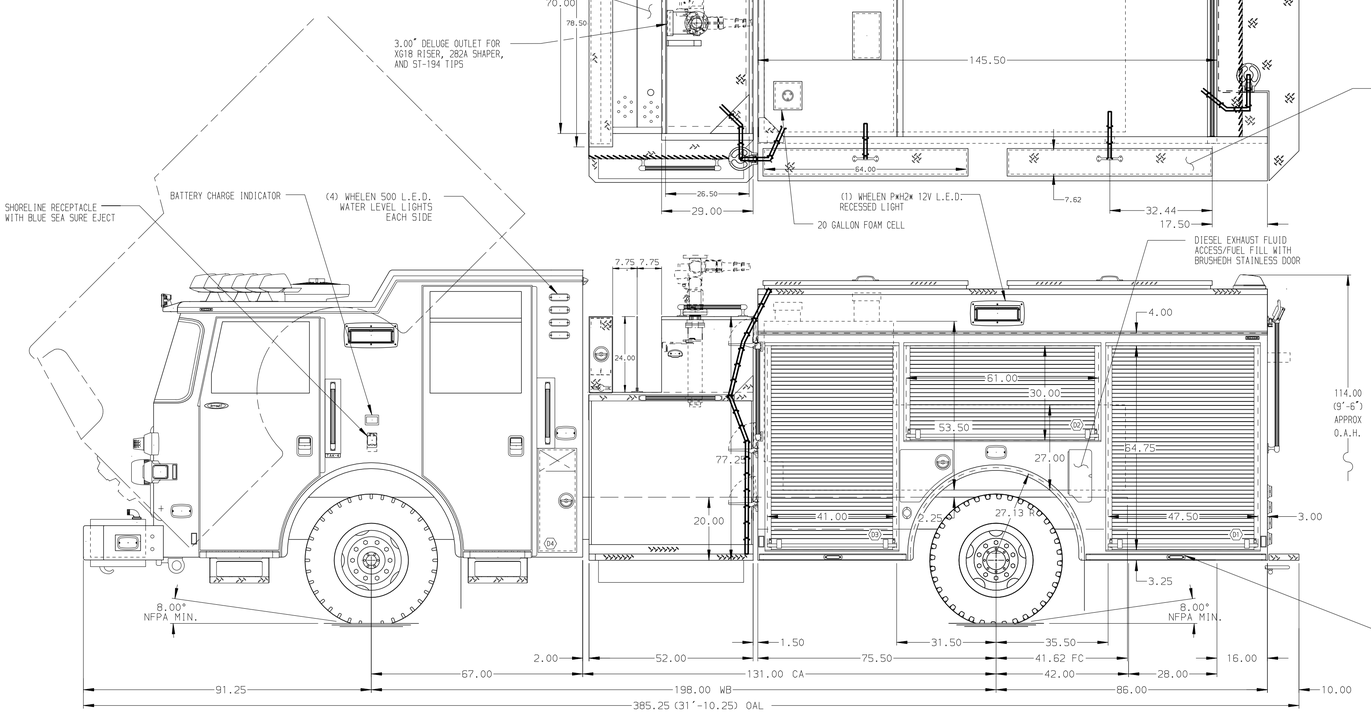

HOSEBED CAPACITIES

1. 200' OF 2.50" D.J. HOSE
2. 1000' OF 5.00" L.D. HOSE
3. 700' OF 3.00" D.J. HOSE
4. 200' OF 3.00" D.J. HOSE
5. 200' OF 1.75" D.J. HOSE
6. 200' OF 1.75" D.J. HOSE

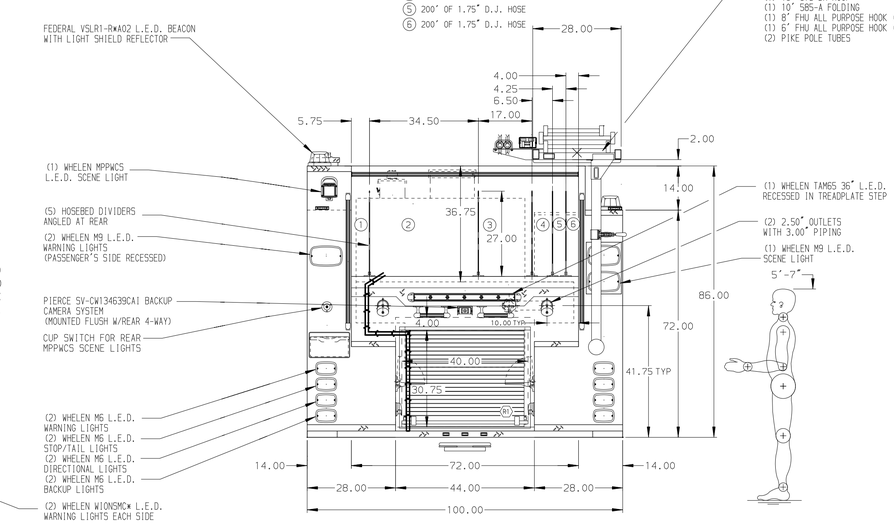

ALUMINUM BODY

MAXIMUM O.A.H. 122.00"

NOTE

DIMENSIONS SHOWN ARE APPROXIMATE AND ARE SUBJECT TO MINOR DEVIATIONS AS MAY OCCUR OR BE NECESSARY IN CONSTRUCTION.
MINOR DETAILS NOT SHOWN.

NOTES:

1. ONSPOT EXTREME DUTY AUTOMATIC TIRE CHAINS TO BE PROVIDED AT REAR
2. CTF WHEEL CHOCKS AND MOUNTING BRACKETS
3. ALUMINUM TREADPLATE EXTERIOR REAR WALL OF CAB
4. ALUMINUM 4-WAY ON CREW CAB ROOF
5. BATTERY CHARGER/AIR COMPRESSOR LOCATED ABOVE D3IN HATCH COMPARTMENT
6. STAINLESS STEEL DRIP PANS FOR ROLL UP DOORS IN SIDE BODY COMPARTMENTS
7. PAINTED SHELF TRACKS LOCATED IN COMPARTMENTS D1, D2, D3, P1, P3, AND R1
8. ONE FULL WIDTH/DEPTH PAINTED ADJUSTABLE SHELF IN COMPARTMENTS P3, R1, TWO IN D1, D2, D3, FOUR IN P1
9. ONE ADJUSTABLE TILTING SLIDE-OUT TRAY IN COMPARTMENT P3
10. SWING-OUT TOOL BOARD WITH PEGBOARD IN COMPARTMENT P2
11. PARTITION BETWEEN COMPARTMENTS D1/R1 AND P1/R1
12. AIR OUTLET WITH DISCONNECT FITTING LOCATED ON DS PUMP PANEL
13. ONE FLOOR MOUNTED SLIDE-OUT TRAY LOCATED IN COMPARTMENT R1 AND P3

REV	DATE	BY	CH
V	08JAN18	LST	LPA
V	01DEC17	LST	LPA
V	14SEP17	LST	SMA

CHASSIS DATA
MAKE: PIERCE
MODEL: ARROW XT

Pierce MANUFACTURING INC.

TITLE: 1500-D-750P 730 GAL WATER, 20 GAL FOAM, 161 BODY FH & D FRONT PS, FH DS, FDLER, HYD EQUIP RACK
FOR: COBB COUNTY FIRE DEPARTMENT MARIETTA, GA
DWG NO.: 31607AD

JOB NO.	31607 01-05
SCALE	1:24
DATE	
DRAWN BY	LST
DATE	29AUG17
CHECKED BY	SMA
DATE	06SEP17
SHEET SIZE	D
SHEET NO.	1 OF 1

View File Created 09-JAN-2018 11:12:18