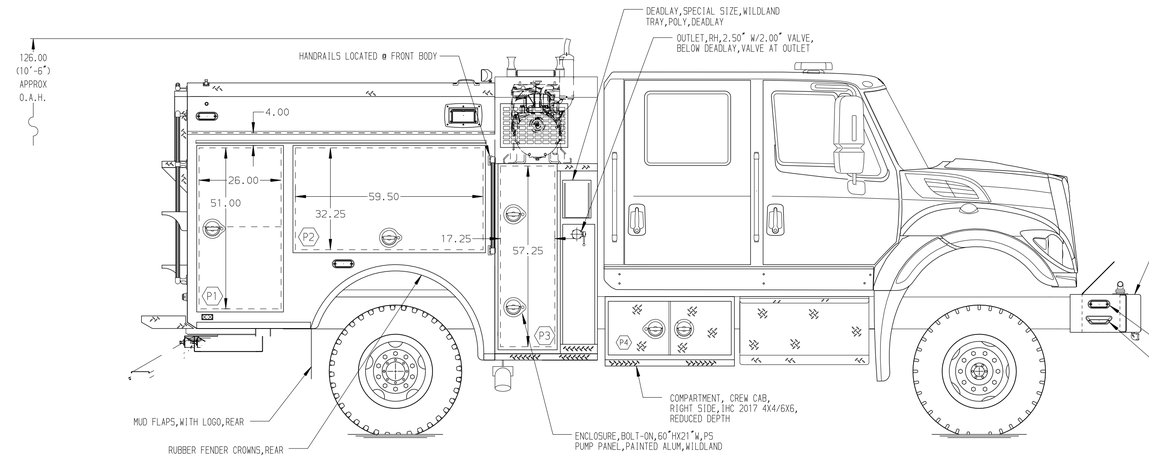

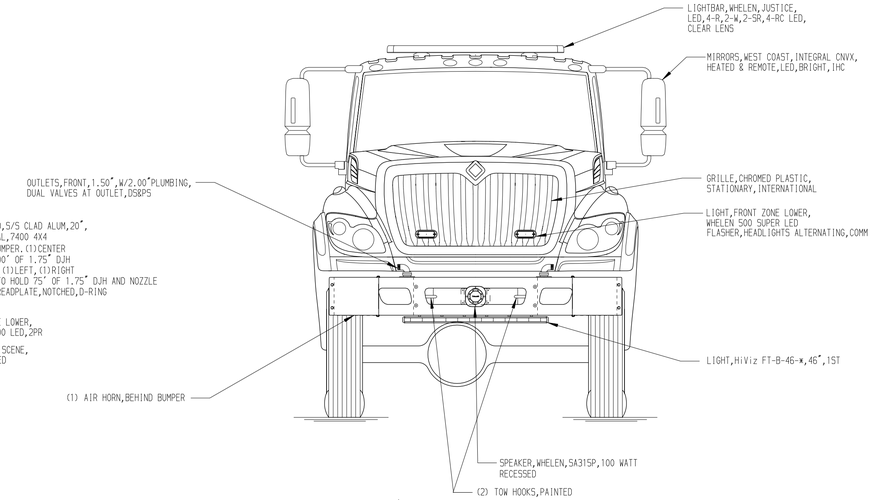

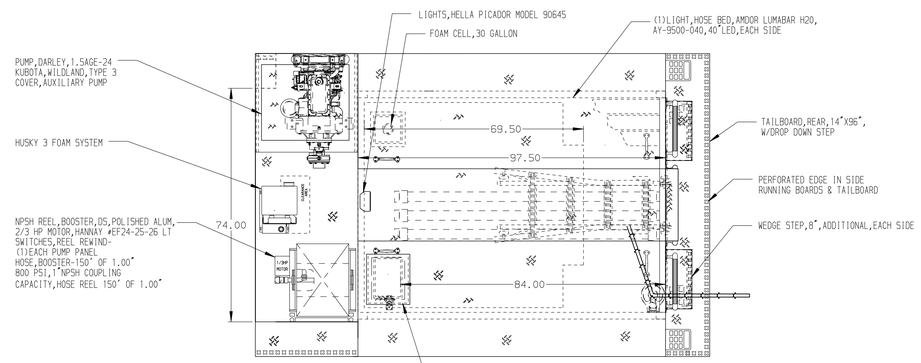

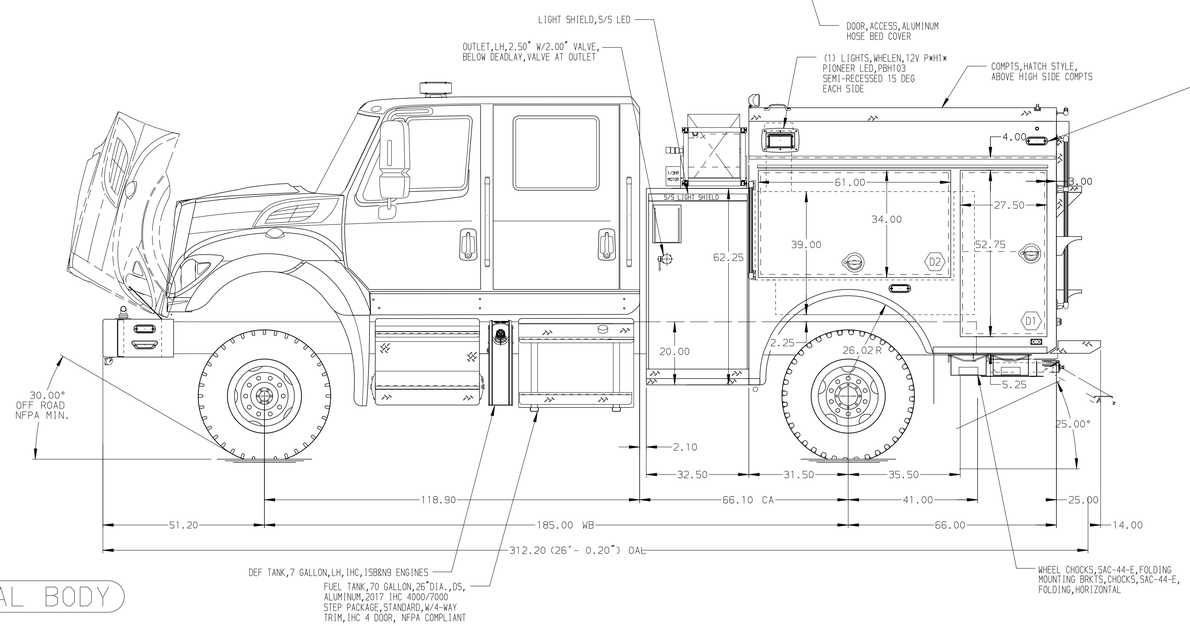

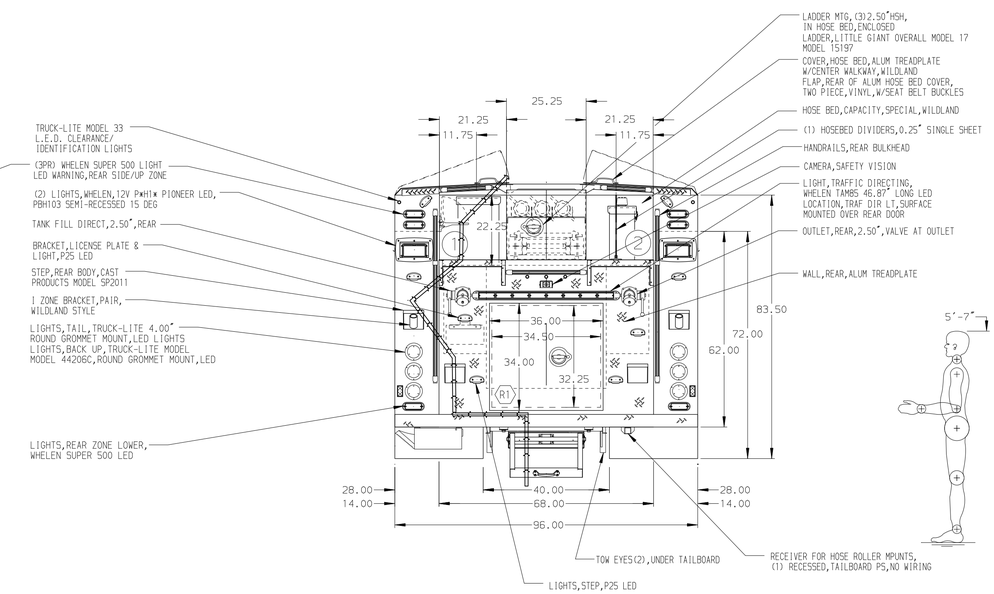

GALVANNEAL BODY

NOTE

DIMENSIONS SHOWN ARE APPROXIMATE
AND ARE SUBJECT TO MINOR DEVIATIONS
AS MAY OCCUR OR BE NECESSARY IN
CONSTRUCTION.
MINOR DETAILS NOT SHOWN.

REV	DATE	BY	CH
V	05JAN18	JLA	NAS

CHASSIS DATA	TITLE	500-D-500 POLY,30 FOAM,TYPE 3-MODEL 14 WILDLAND (1)DEADLAY,DARLEY AUX PUMP,(1)REEL	JOB NO. 31624
MAKE IHC	FOR	PECHANGA FIRE DEPARTMENT TEMECULA,CALIFORNIA	SCALE 1:24 / DATE
MODEL SFA 4X4 4 X 4	DWG NO.	31624AD	DRAWN BY JAF 12JUL17
			CHECKED BY RWI 18JUL17
			SHEET SIZE D / SHEET NO. 1 OF 1

Pierce MANUFACTURING INC.

View File Created 05-JAN-2018 14:27:23