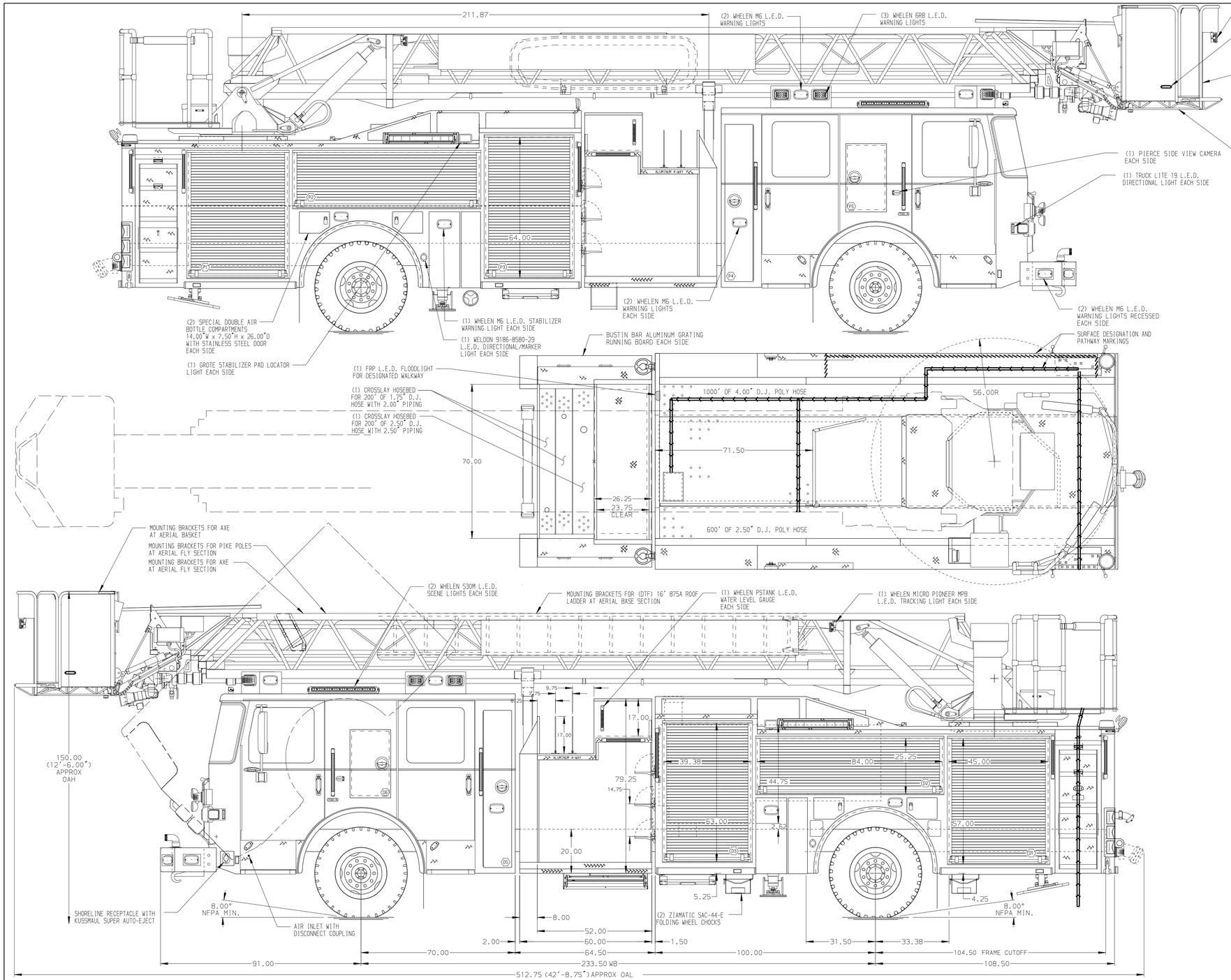

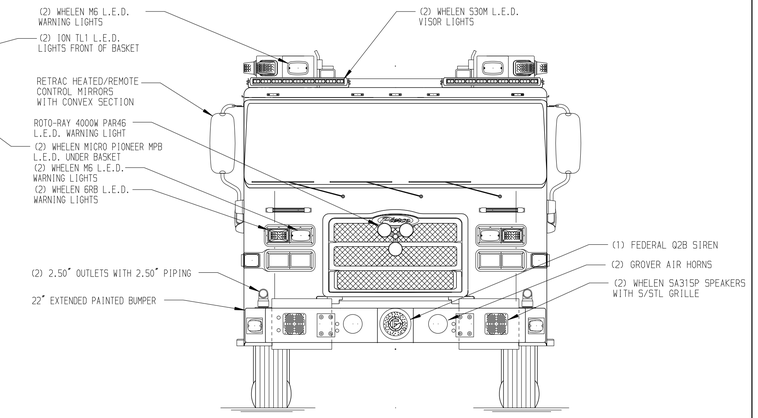

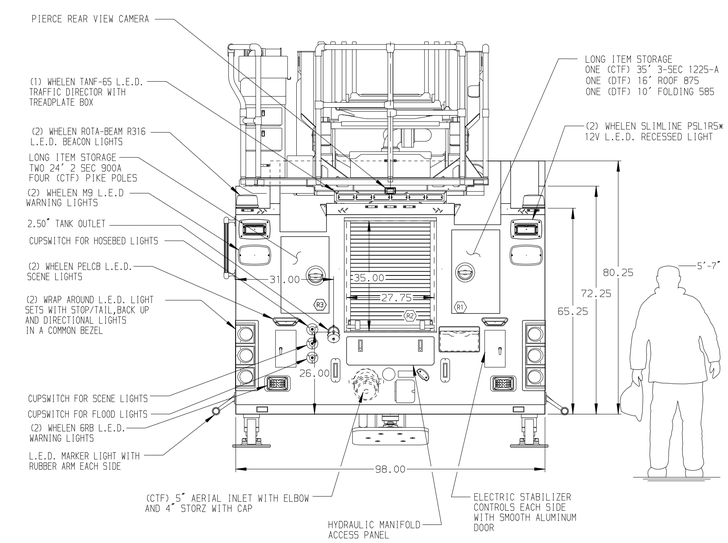

ALUMINUM BODY

Pierce MANUFACTURING INC.

JOB NO.	31625
SCALE	1:24
DATE	
DRAWN BY	MWA
DATE	130CT17
CHECKED BY	CRI
DATE	160CT17
SHEET SIZE	D
SHEET NO.	1 OF 1

TITLE: 110' ASCENDANT AERIAL PLATFORM AND BODY ASSEMBLY
500 GALLON WATER TANK

FOR: GUTHRIE FIRE DEPARTMENT
GUTHRIE, OKLAHOMA

DWG NO.: 31625AD

CHASSIS DATA — MAKE: PIERCE — MODEL: ENFORCER

REV	DATE	BY	CH
7	17JAN18	MWA	-
6	05JAN18	MWA	COR
5	18DEC17	MWA	COR
4	24OCT17	MWA	CRI

NOTE

DIMENSIONS SHOWN ARE APPROXIMATE AND ARE SUBJECT TO MINOR DEVIATIONS AS MAY OCCUR OR BE NECESSARY IN CONSTRUCTION.
MINOR DETAILS NOT SHOWN.

1. JUMPER STUDS AT DRIVER'S SIDE CAB STEP
2. BATTERY CHARGER LOCATED IN COMPARTMENT D3
3. BATTERY CHARGE INDICATOR LOCATED ON DRIVER'S SEAT RISER
4. ONE ADJUSTABLE FULL WIDTH/FULL DEPTH SHELF IN COMPARTMENT D1, D2, D3, P1, P2, P3, R2
5. COMPARTMENT VENT WITH SPLASH GUARD IN COMPARTMENT P1, P3
6. ONE FLOOR MOUNTED SLIDE-OUT TRAY IN COMPARTMENT D1, D3, P1, P3
7. HOSE STORAGE RACK WITH ADJUSTABLE DIVIDERS FOR ROLLED HOSE IN COMPARTMENT D3
8. ONE HORIZONTAL EQUIPMENT MOUNT IN COMPARTMENT D1, D3, P1, P3
9. L.E.D. LIGHTING ON AERIAL LADDER SECTIONS
10. 2-WAY INTERCOM SYSTEM BETWEEN AERIAL TIP AND TURNTABLE
11. 1250 GPM HIGH FLOW WATERWAY
12. TETHERED MONITOR REMOTE CONTROL
13. AIR OUTLET LOCATED ON DRIVER'S SIDE PUMP PANEL
14. ONE ADJUSTABLE SLIDE OUT ALUMINUM PEGBOARD IN COMPARTMENT D4,P4
15. TRIDENT STEPS ON AERIAL DEVICE

View File Created 19-JAN-2018 07:12:48