PUMPER

BODY
Medium Aluminum 2nd Gen Pumper

CHASSIS
Saber FR Chassis

CHASSIS

AXLE, FRONT, CUSTOM
18,000 Lb Dana Axle

AXLE, REAR
27,000 Lb Meritor Axle

ENGINE
450 HP Cummins L9 Engine

TRANSMISSION
Allison 5th Gen, 3000 EVS P

BUMPER
19" Extended Stainless Steel

CAB
7010 Saber FR Cab

BODY

WATER TANK
1000 Gallon Poly Water Tank

COMPT, PUMPER, REAR
51.25" FF Rollup Rear Compt

COMPT, PUMPER, DRIVER SIDE
152" Rollup Full Height Front & Rear FDLER

COMPT, PUMPER PASS. SIDE
152" Rollup Full Height Front & Rear FDLER

FIRE SUPPRESSION

PUMPHOUSE
52" Control Zone Side Mount

PUMP
1500 GPM Hale DSD

CROSSLAYS, 1.50"
(2) 1.50" Standard Capacity

CROSSLAYS, 2.50"
(1) 2.50" Standard Capacity

SPEEDLAYS
Speedlays Not Required

GENERATOR
Generator Not Required

Foam System
Husky 3 Single Agent Foam System

Foam Cell
30 Gallon Foam Cell, Not Reduced Water

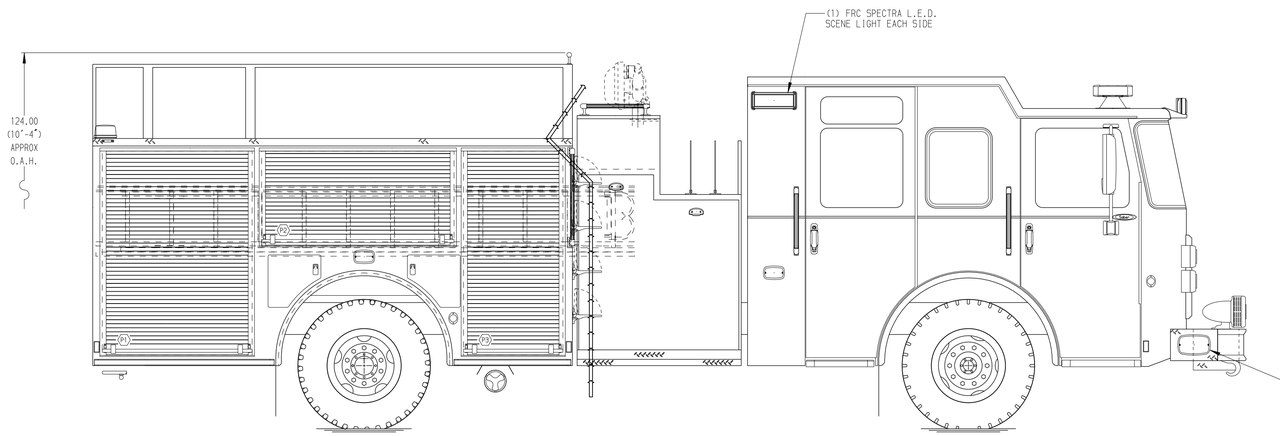

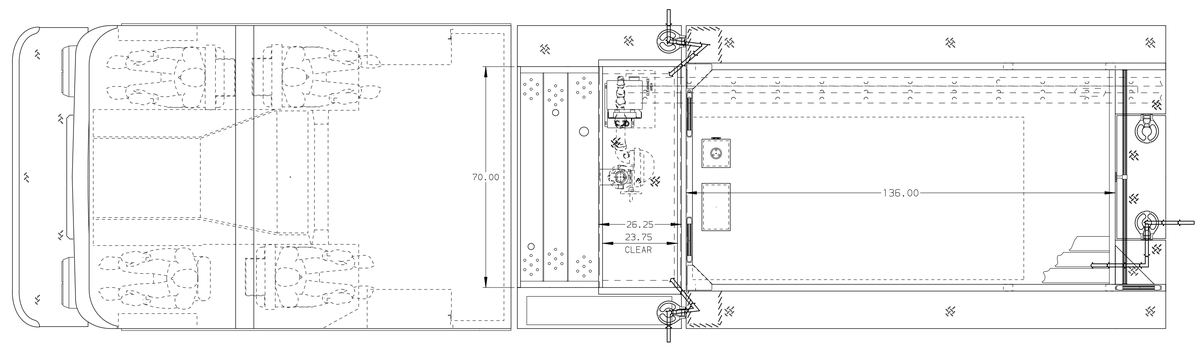

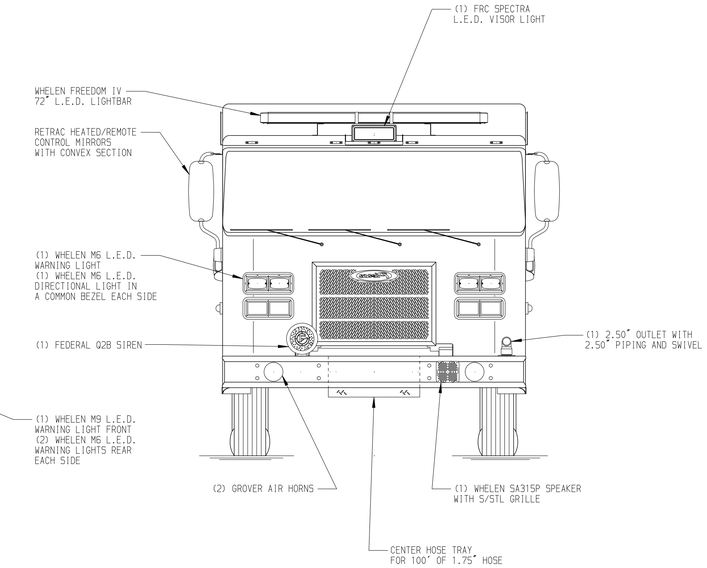

HOSEBED CAPACITY

BED 1
200' OF 2.50" D.J. POLY HOSE

BED 2
1000' OF 5.00" D.J. POLY HOSE

BED 3
500' OF 3.00" D.J. POLY HOSE

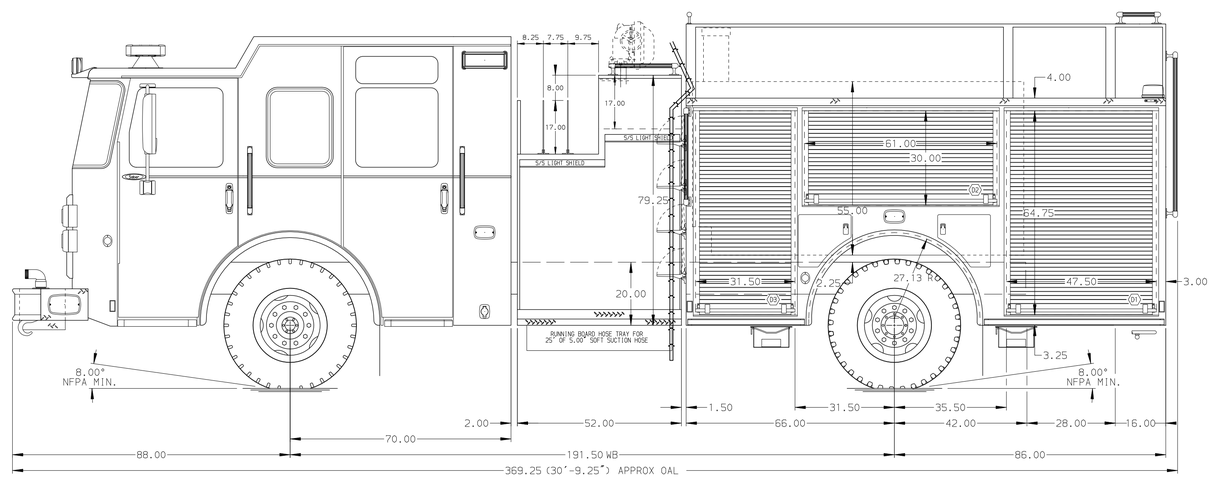

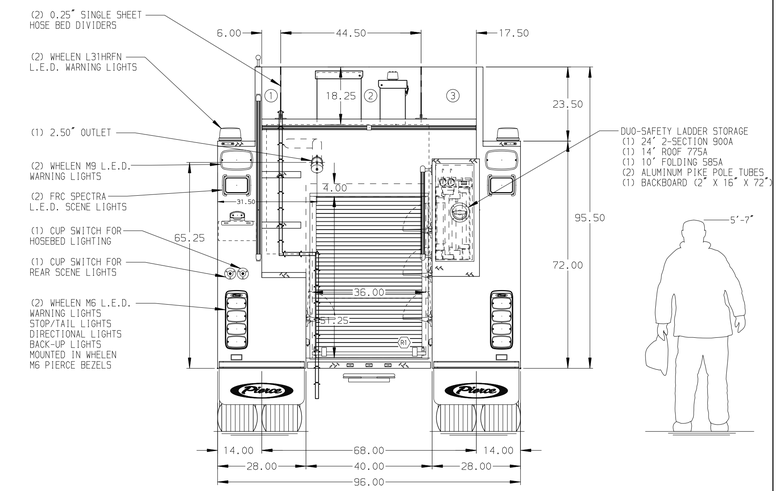

NOTE
DIMENSIONS SHOWN ARE APPROXIMATE AND ARE SUBJECT TO MINOR DEVIATIONS AS MAY OCCUR OR BE NECESSARY IN CONSTRUCTION.
MINOR DETAILS NOT SHOWN.

REV	DATE	BY	CH
B	03NOV17	JLA	RWI
A	27SEP17	JLA	RWI

CHASSIS DATA	
MAKE	PIERCE
MODEL	SABER FR
DWG NO.	31657AD

Pierce MANUFACTURING INC.

TITLE	Pierce Pumper Approval Drawing -
FOR	Travis County ESD 12 -

JOB NO.	31657 01-02
SCALE	1:24
DATE	
DRAWN BY	COL
	28JUN17
CHECKED BY	SHE
	14JUL17
SHEET SIZE	D
SHEET NO.	1 OF 1

View File Created 06-NOV-2017 07:45:13