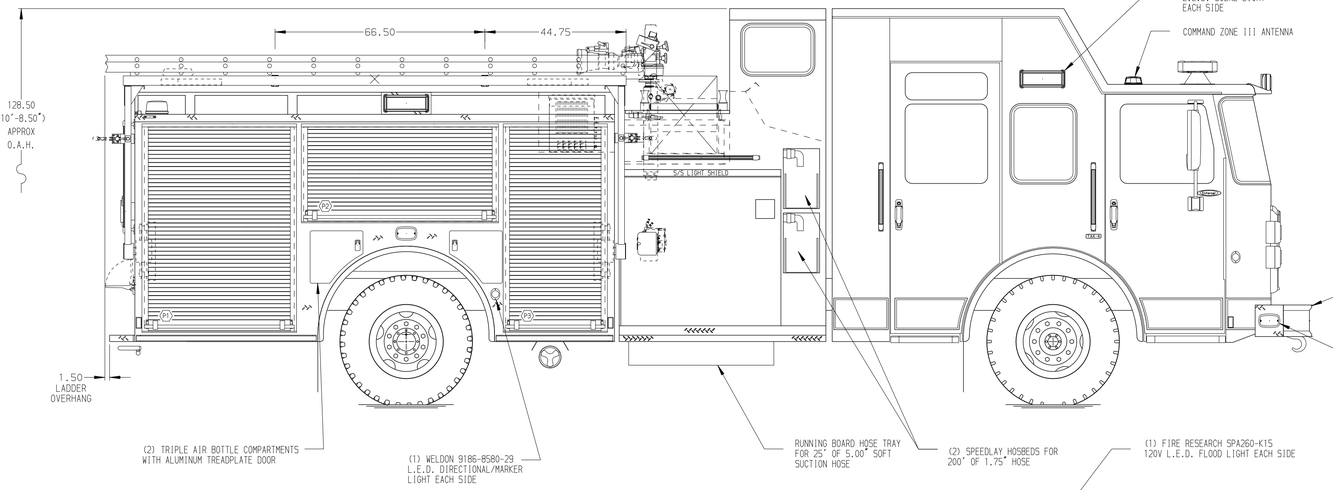

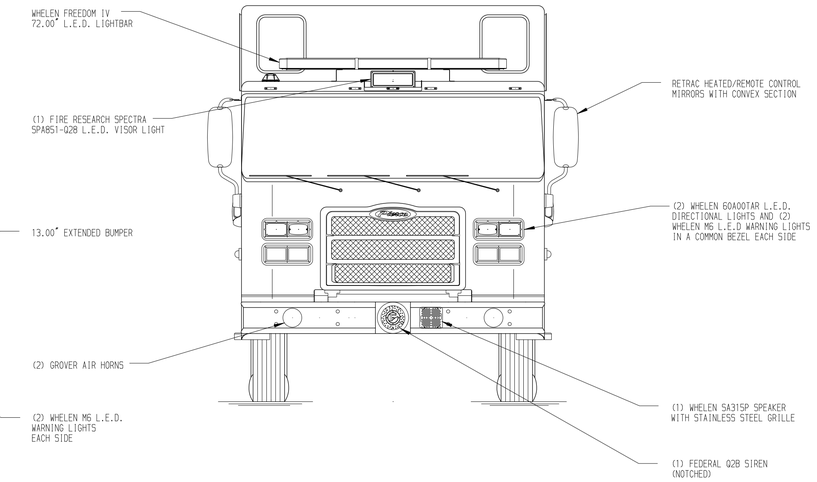

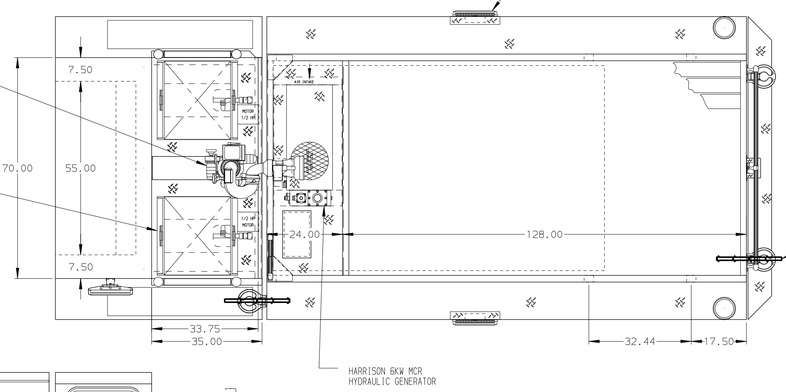

HOSEBED CAPACITIES

1. 300' OF 3.00" D.J. HOSE
2. 1000' OF 5.00" D.J. HOSE
3. 200' OF 1.75" D.J. HOSE

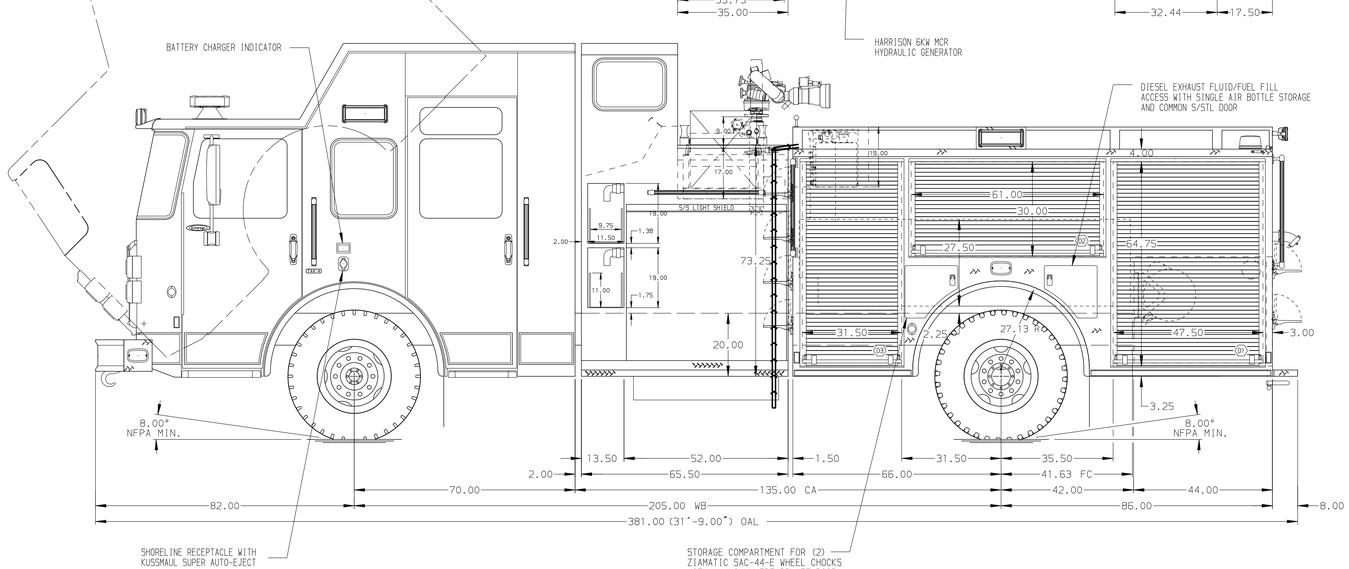

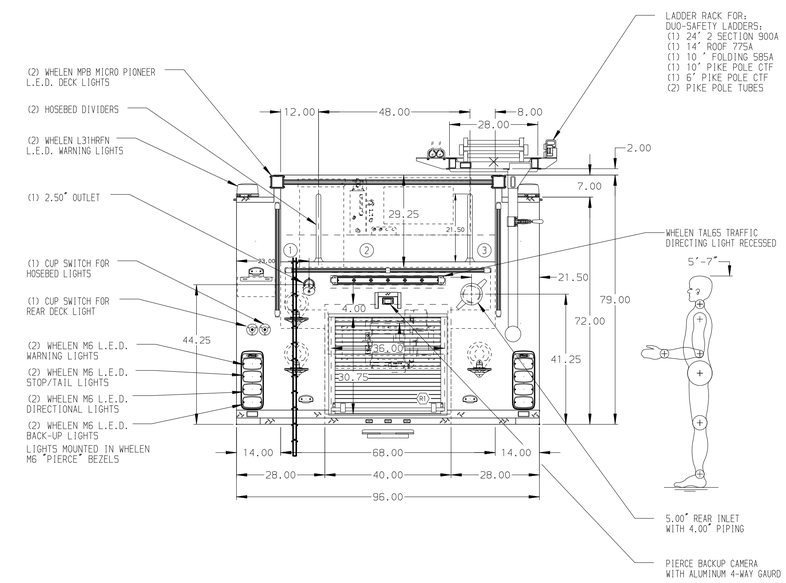

ALUMINUM BODY

MAXIMUM O.A.L. 384.00"

FRONTAL IMPACT PROTECTION

NOTE

DIMENSIONS SHOWN ARE APPROXIMATE AND ARE SUBJECT TO MINOR DEVIATIONS AS MAY OCCUR OR BE NECESSARY IN CONSTRUCTION.
MINOR DETAILS NOT SHOWN.

1. BATTERY CHARGER LOCATED IN CAB
2. DUAL L.E.D. LIGHT STRIPS LOCATED IN HOSE BED
3. ONE FLOOR MOUNTED SLIDE-OUT TRAY IN COMPARTMENT D1, D3, P1, P3 & R1
4. ALUMINUM PEGBOARD WITH TRACKS ON THE REAR WALL OF COMPARTMENT D1, D3, D2, P1, P2, & P3
5. TWO ADDITIONAL POLY TRAYS SHIPPED LOOSE
6. CIRCUIT BREAKER PANEL IN COMPARTMENT D3
7. ONE HANNAY ELECTRIC REWIND CORD WITH 200' OF 10/3 CABLE REEL MODEL 1618-17-18 LOCATED R1
8. ONE FULL WIDTH/DEPTH ADJUSTABLE SHELF LOCATED IN COMPARTMENT D1, D2, D3, P1, P2, & P3

REV	DATE	BY	CH
7	17JAN18	MMF	DTS
6	15DEC17	MMF	DTS
5	21SEP17	MMF	CSH

CHASSIS DATA
MAKE: PIERCE
MODEL: ENFORCER

Pierce MANUFACTURING INC.

TITLE: 2000-D-500 GAL POLY, 152" FH FDLER, TOP CONTROL (2) SPEEDLAYS, HYD. EQUIP. RACK, DELUGE, GENERATOR

FOR: ABERDEEN FIRE DISTRICT #1
ABERDEEN, NEW JERSEY

DWG NO.: 31669AD

JOB NO.	31669
SCALE	1:24
DATE	06SEP17
DRAWN BY	MMF
CHECKED BY	CSH
11SEP17	
SHEET SIZE	D
SHEET NO.	1 OF 1

View File Created 17-JAN-2018 13:40:27