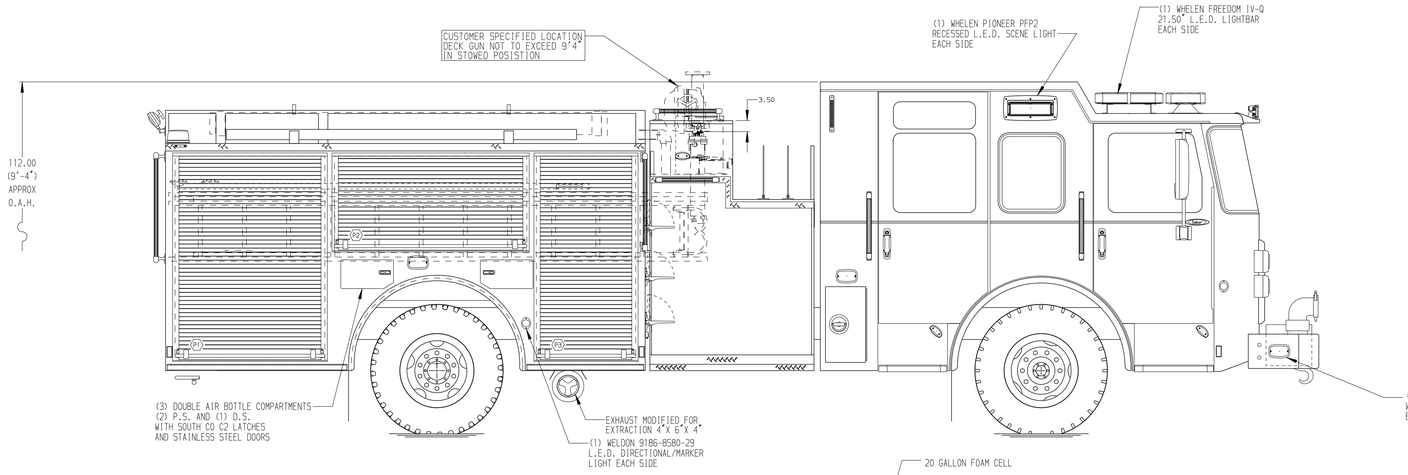

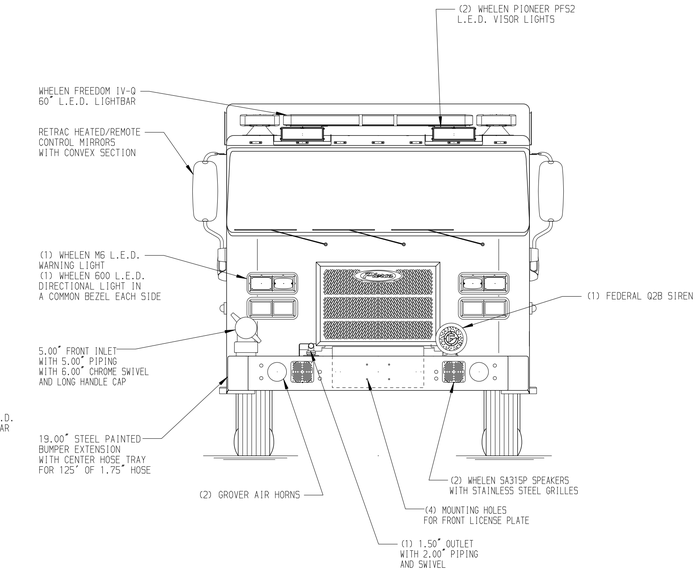

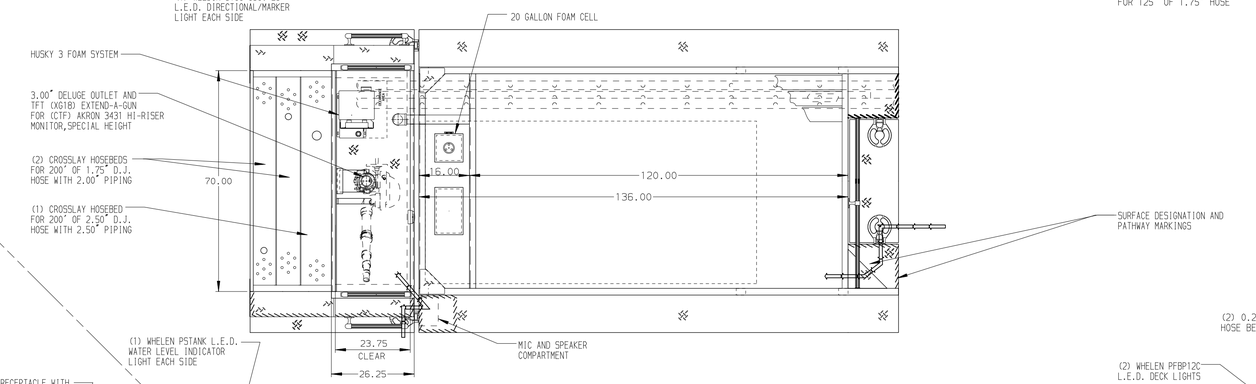

HOSEBED CAPACITIES

1. 1000' OF 4.00" LDH HOSE
2. 400' OF 3.00" D.J. POLY HOSE
3. 200' OF 2.50" D.J. POLY HOSE

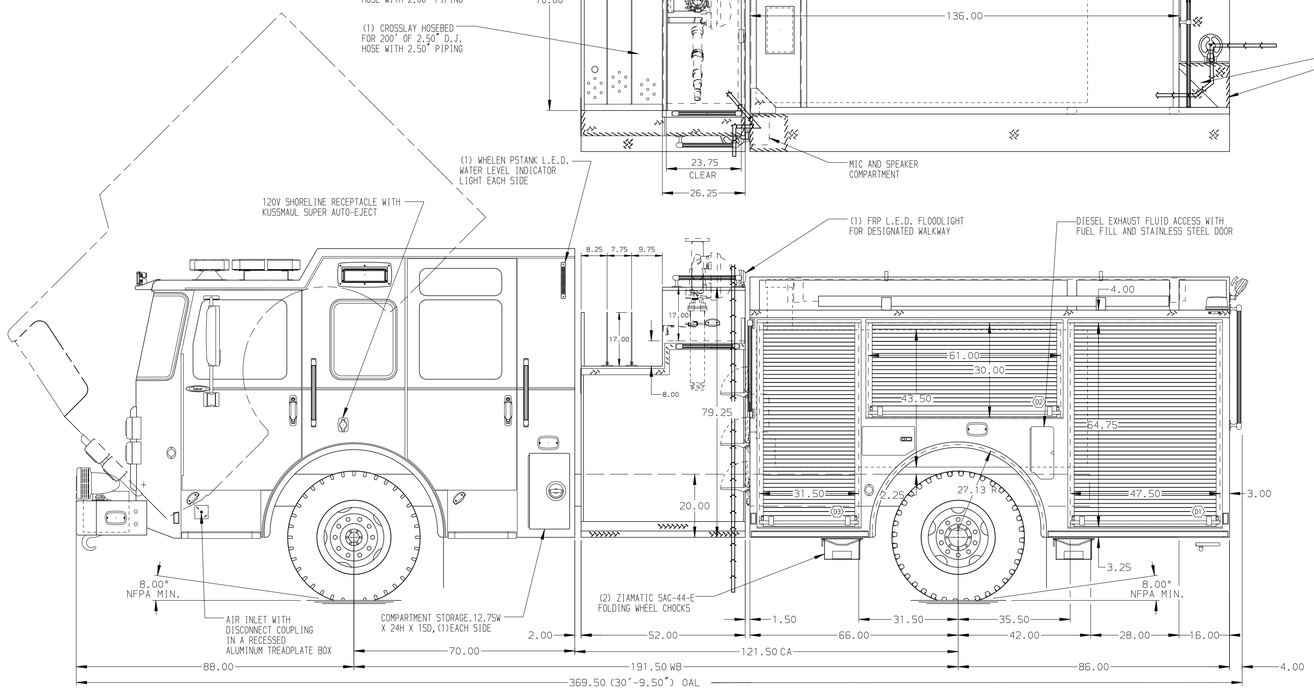

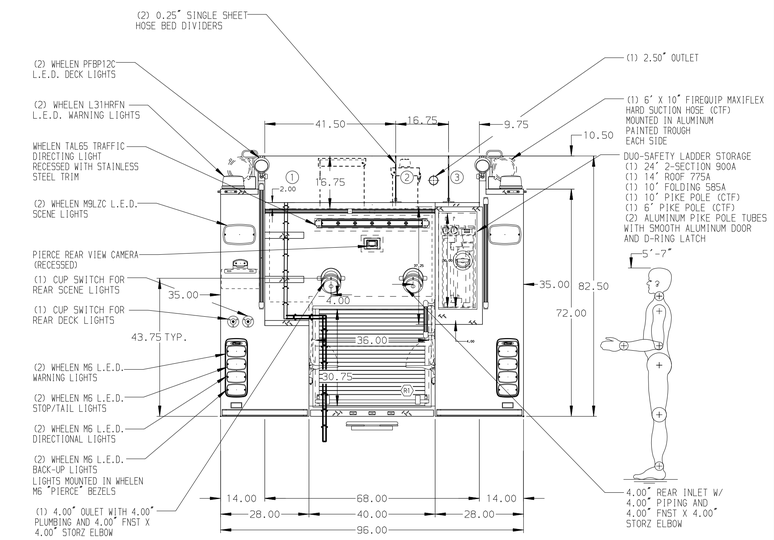

STAINLESS STEEL BODY

MAXIMUM O.A.H. 112.00"

MAXIMUM O.A.L. 372.00"

NOTE

DIMENSIONS SHOWN ARE APPROXIMATE AND ARE SUBJECT TO MINOR DEVIATIONS AS MAY OCCUR OR BE NECESSARY IN CONSTRUCTION.
MINOR DETAILS NOT SHOWN.

REV	DATE	BY	CH
7	20FEB18	JAF	RWI
6	08FEB18	JLA	NAS
5	09JAN18	JAF	NAS
4	10NOV17	LST	NPA

CHASSIS DATA
MAKE: PIERCE
MODEL: SABER FR

Pierce MANUFACTURING INC.

TITLE: 1500-D-770P, 750 GAL OF WATER W/ 20 GAL FOAM CELL 152" FH FDLER,(3) X-LAYS,LDRS. BTWN. TANK & S. SHEET

FOR: ROCKPORT FIRE DEPARTMENT ROCKPORT, MASSACHUSETTS

DWG NO.: 31670AD

JOB NO.: 31670
SCALE: 1:24
DATE: 30OCT17
DRAWN BY: LST
CHECKED BY: NPA
01NOV17
SHEET SIZE: D
SHEET NO.: 1 OF 1

View File Created 01-MAR-2018 13:19:43