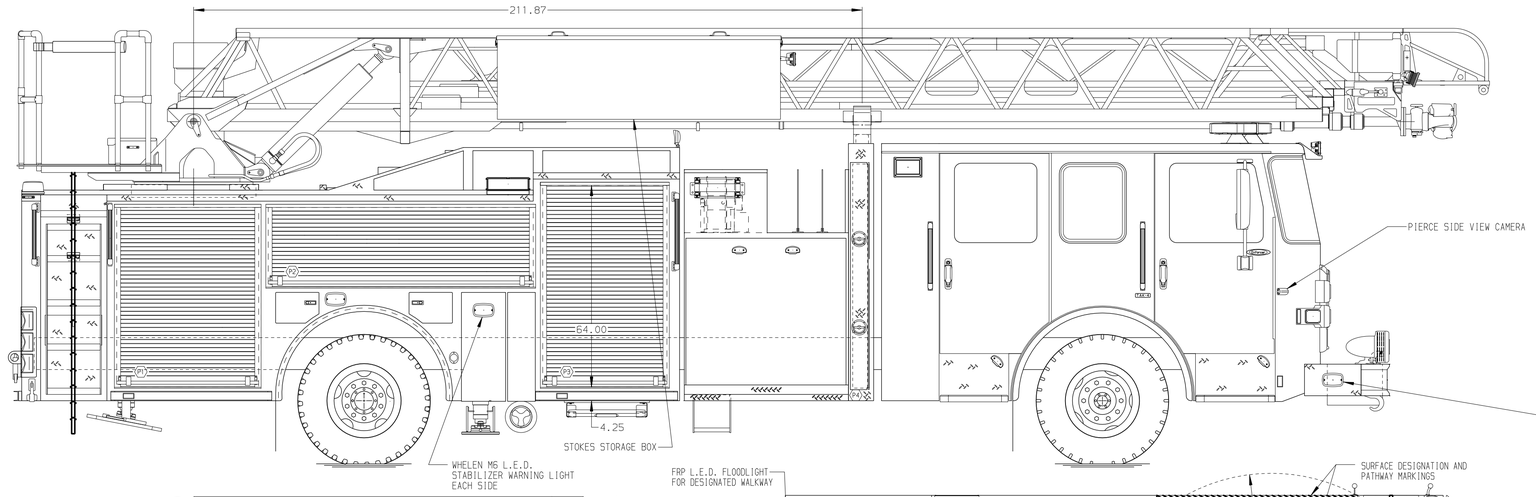


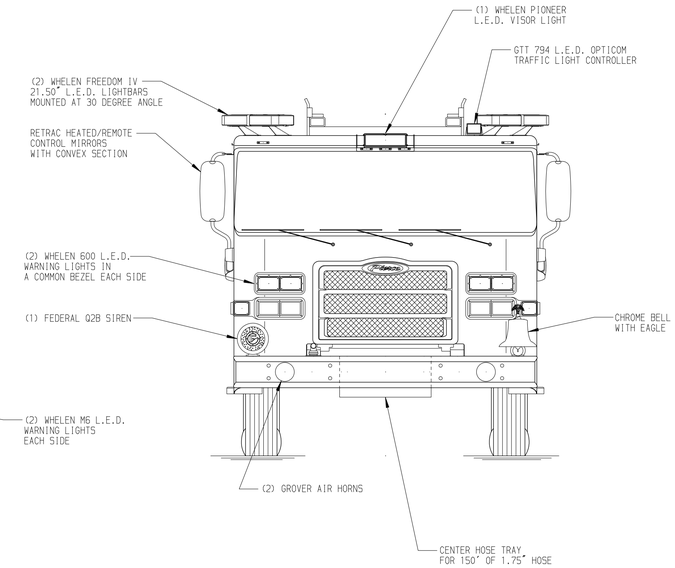


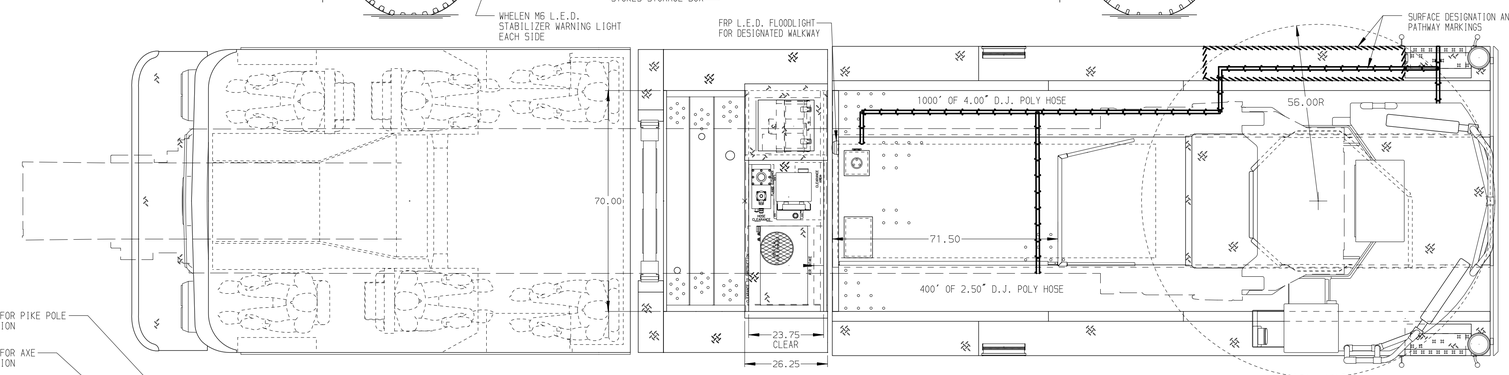


| BODY | WATER TANK |
|---|---|
| 107' ASL Aluminum Body | 480 Gallon Poly Water Tank |
| COMPT,DRIVER SIDE FRONT | Foam System |
| Full Height Rollup Forward | Husky 3 Single Agent Foam System |
| COMPT,DRIVER SIDE REAR | Foam Cell |
| Full Height Rollup Rearward | 20 Gallon Foam Cell, Reduced Water |
| COMPT,PASSENGER SIDE FRONT | |
| Full Height Rollup Forward | |
| COMPT,PASSENGER SIDE REAR | |
| Full Height Rollup Rearward | |

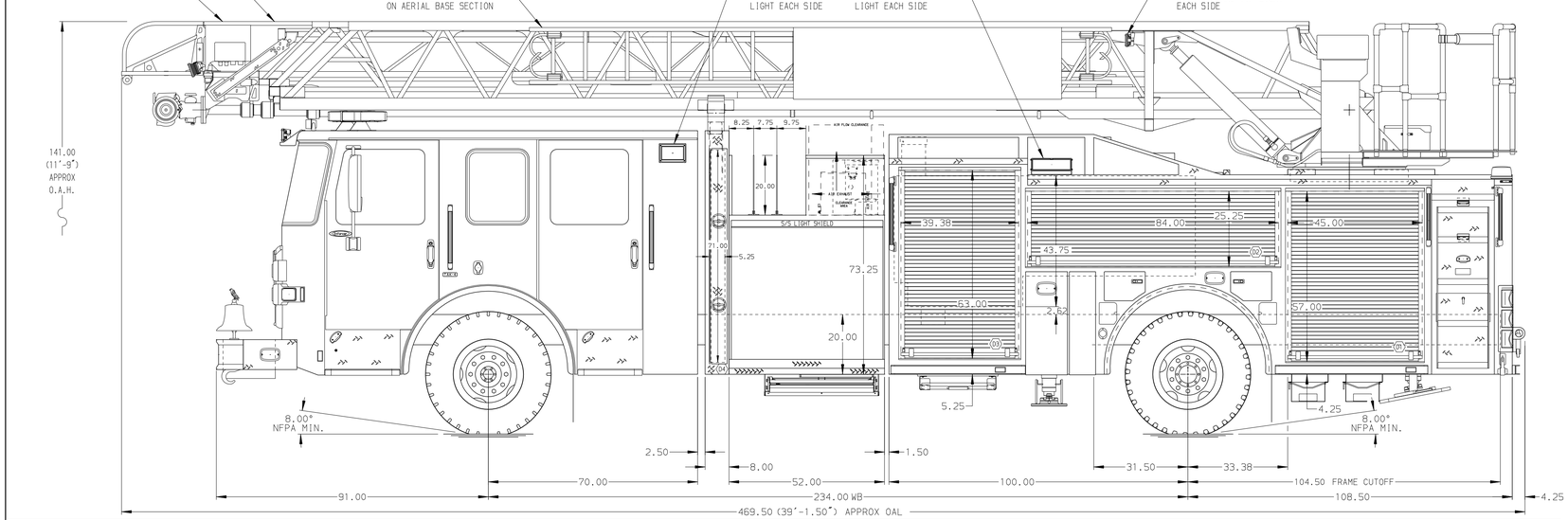


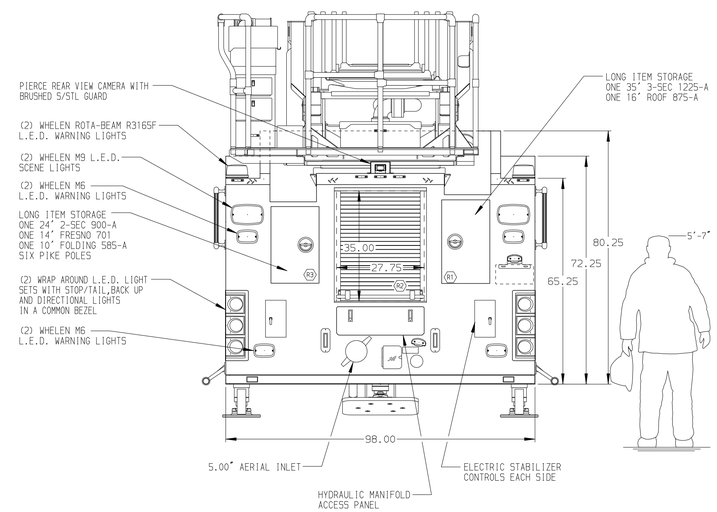


| CHASSIS | CAB | AXLE,FRONT,CUSTOM | TRANSMISSION | PUMPHOUSE | CROSSLAYS,1.50" | SPEEDLAYS | SAFETY |
|---|---|---|---|---|---|---|---|
| Enforcer Chassis | 7000 Enforcer Cab | 22,800 Lb TAK-4 Axle | ALLison 5th Gen, 3000 EVS P | 52" Control Zone Side Mount | (1) Capacity 150' OF 1.75" | Speedlays Not Required | Side Roll and |
| ENGINE | BUMPER | AXLE,REAR | | PUMP | (1) Capacity 300' OF 1.75" | GENERATOR | Frontal Impact Protection |
| 450 HP Cummins L9 Engine | 22" Extended Stainless Steel | 33,500 Lb Meritor Axle | | 1500 GPM Waterous CSU | CROSSLAYS,2.50" | Harrison 3.6kW MSV Hydraulic | |
| | | | | | (1) 2.50" Standard Capacity | | |

NOTE

DIMENSIONS SHOWN ARE APPROXIMATE AND ARE SUBJECT TO MINOR DEVIATIONS AS MAY OCCUR OR BE NECESSARY IN CONSTRUCTION.
MINOR DETAILS NOT SHOWN.

1. ONE 1.50 OUTLET WITH 2.00 PIPING AND SWIVEL LOCATED INBOARD ON RIGHT SIDE OF FRONT BUMPER
2. SHORELINE RECEPTACLE WITH KUSSMAUL SUPER AUTO-EJECT LOCATED ON DRIVER SIDE OF THE CAB
3. AIR INLET WITH DISCONNECT COUPLING IN THE DRIVER SIDE STEPWELL
4. BATTERY CHARGER LOCATED BEHIND DRIVER SEAT
5. BATTERY CHARGE INDICATOR LOCATED ON THE DRIVER SIDE SEAT RISER
6. EIGHT ADJUSTABLE SHELVES IN COMPARTMENTS PER SHOP ORDER
7. TWO FLOOR MOUNTED SLIDE-OUT TRAY LOCATED PER SHOP ORDER
8. ONE SWING-OUT ALUMINUM TOOL BOARD IN COMPARTMENT PER SHOP ORDER
9. ONE CTECH DRAWER ASSEMBLY IN COMPARTMENT PER SHOP ORDER
10. TWO ALUMINUM PEGBOARD WITH TRACKS ON THE REAR WALL OF COMPARTMENTS PER SHOP ORDER
11. CIRCUIT BREAKER PANEL IN COMPARTMENT D3
12. ONE ACRON ELECTRIC REWIND CORD REEL MODEL ERWC-16-6 WITH 100' OF 10/3 CABLE IN RIGHT SIDE OF CARGO AREA
13. FOUR 120V DUPLEX RECEPTACLES LOCATED IN COMPARTMENTS PER SHOP ORDER
14. NON-RAISED AERIAL PEDESTAL
15. 1500 GPM HIGH FLOW WATERWAY

| REV | DATE | BY | CH |
|---|---|---|---|
| 2 | 21SEP17 | TKA | SHE |
| 1 | 18AUG17 | TKA | SHE |

CHASSIS DATA
MAKE: PIERCE
MODEL: ENFORCER

Pierce MANUFACTURING INC.

TITLE: 107' ASCENDANT AERIAL LADDER AND BODY ASSEMBLY
-
FOR: EAST LONGMEADOW FIRE DEPARTMENT
EAST LONGMEADOW, MASSACHUSETTS
DWG NO.: 31698AD

| JOB NO. | 31698 |
|---|---|
| SCALE | 1:24 |
| DATE | |
| DRAWN BY | TKA 03AUG17 |
| CHECKED BY | CRI 07AUG17 |
| SHEET SIZE | D |
| SHEET NO. | 1 OF 1 |

View File Created 22-SEP-2017 13:45:40