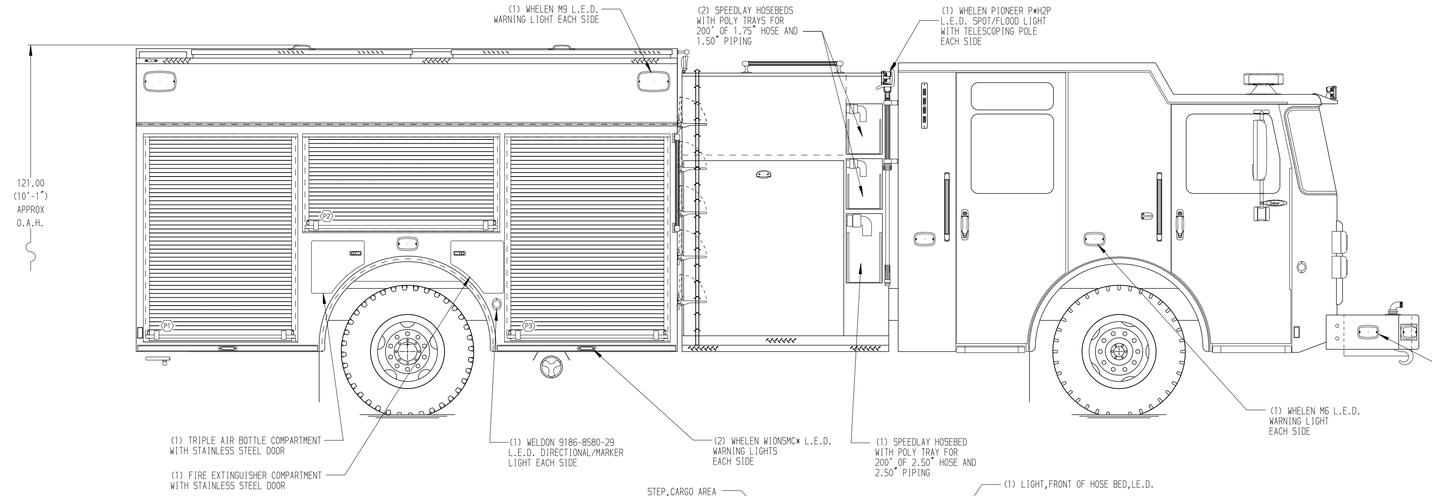

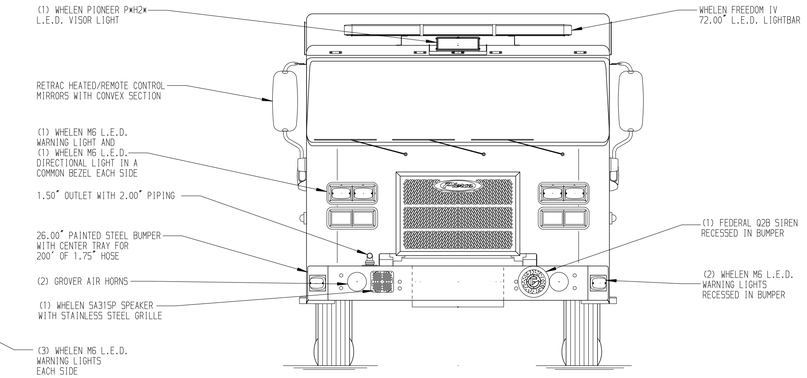

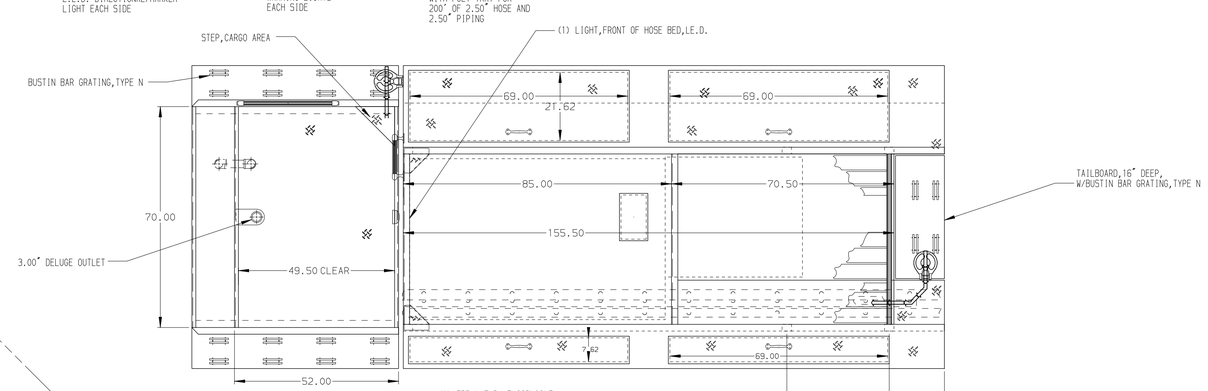

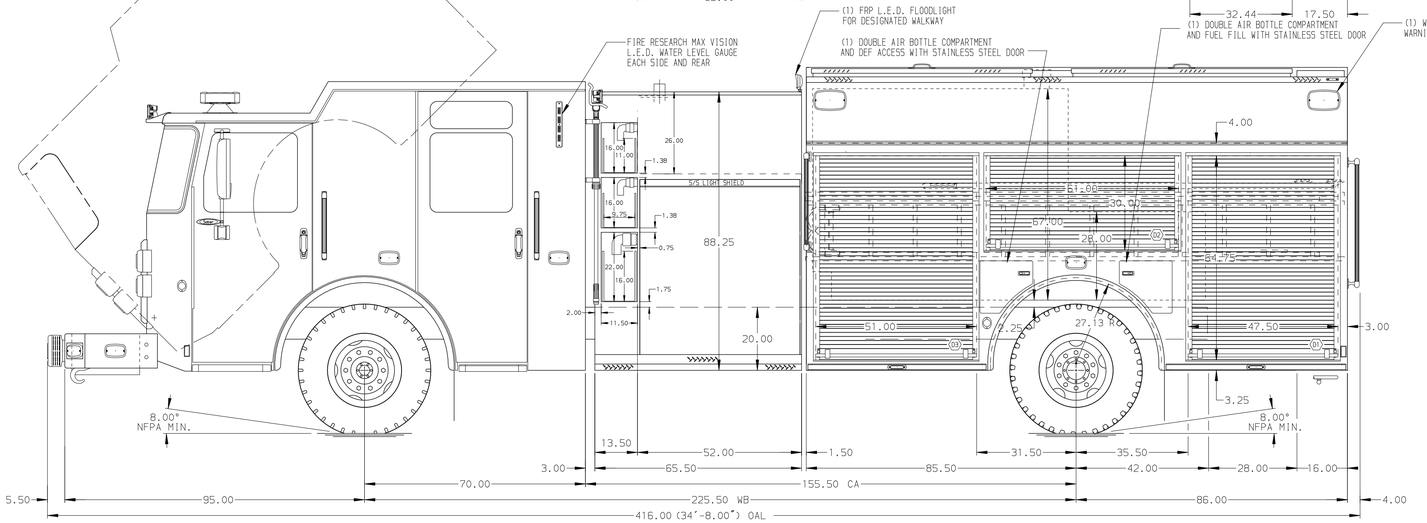

HOSEBED CAPACITIES

1. 200' OF 3.00" D.J. POLY HOSE
2. 1200' OF 5.00" D.J. POLY HOSE

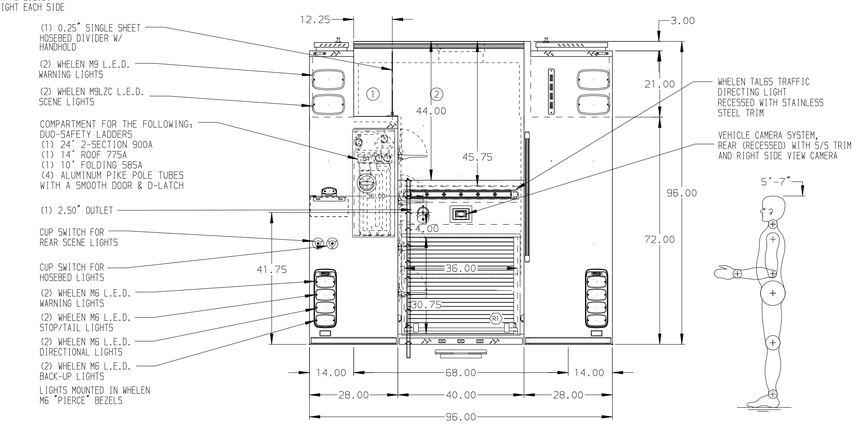

ALUMINUM BODY

SIDE ROLL AND FRONTAL IMPACT PROTECTION

NOTE

DIMENSIONS SHOWN ARE APPROXIMATE AND ARE SUBJECT TO MINOR DEVIATIONS AS MAY OCCUR OR BE NECESSARY IN CONSTRUCTION.
MINOR DETAILS NOT SHOWN.

REV	DATE	BY	CH
7	22JAN18	JLA	RWI

CHASSIS DATA	
MAKE	PIERCE
MODEL	SABER FR

Pierce MANUFACTURING INC.

TITLE	1500-D-1000P,171",FULL HEIGHT,FULL DEPTH D.S. & P.S. (3) SPD-LAYS,DELUGE
FOR	LOWNDES COUNTY FIRE RESCUE VALDOSTA, GEORGIA
DWG NO.	31748AD

JOB NO.	31748
SCALE	1:24
DATE	
DRAWN BY	JWO 08NOV17
CHECKED BY	CSH 09NOV17
SHEET SIZE	D
SHEET NO.	1 OF 1

View File Created 23-JAN-2018 13:30:15