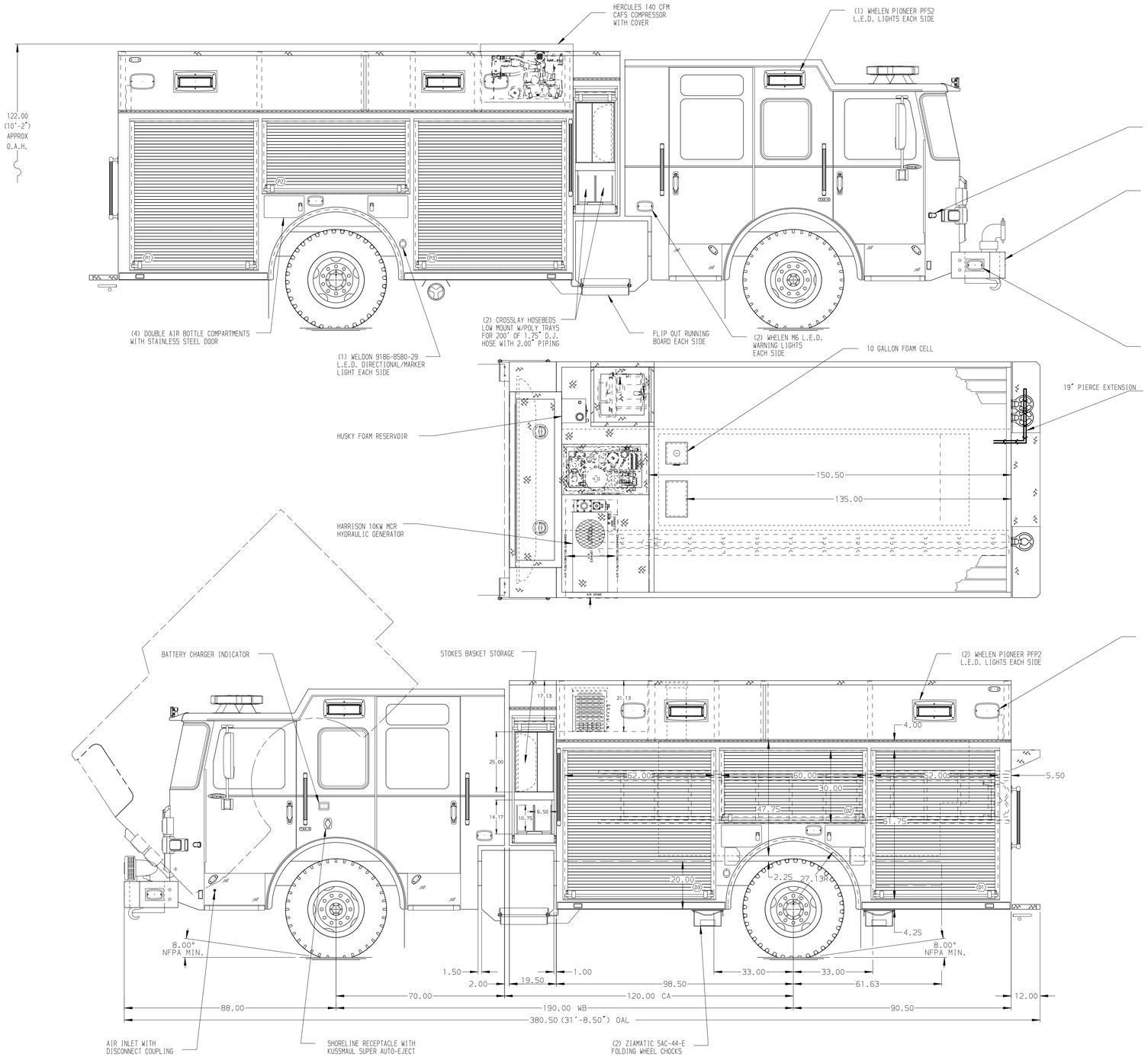

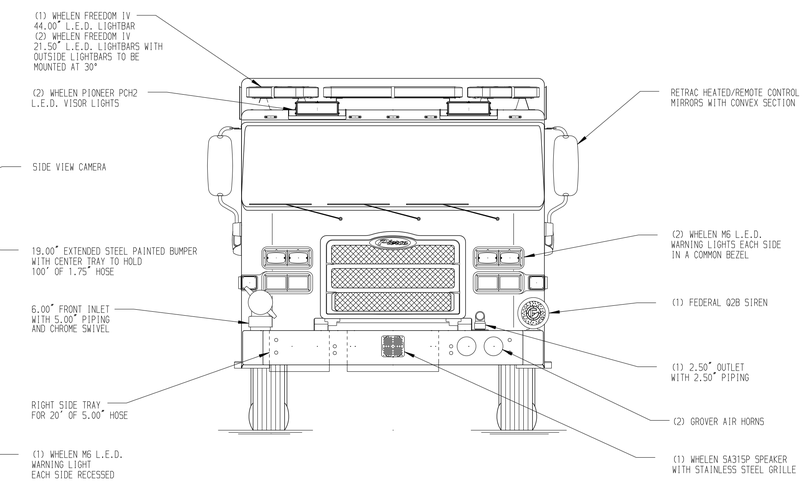

HOSEBED CAPACITIES

1. 200' OF 1.75" D.J. HOSE ABOVE
   400' OF 2.50" D.J. HOSE BELOW
2. 1500' OF 4.00" D.J. HOSE
3. 600' OF 2.50" D.J. HOSE

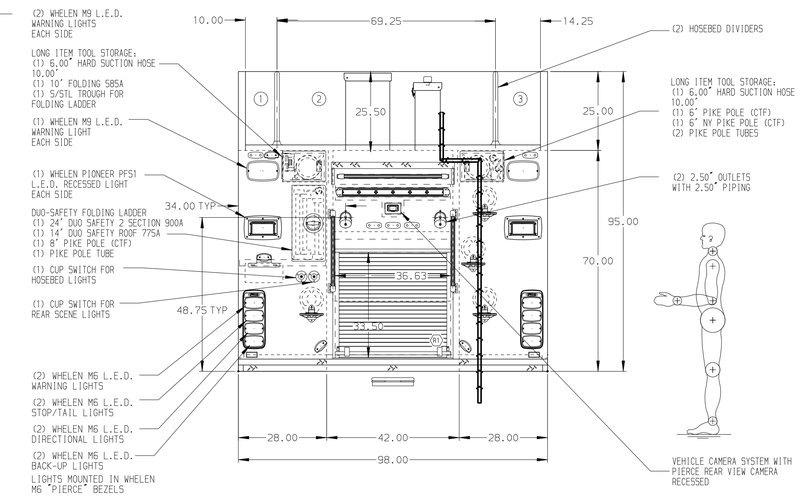

ALUMINUM BODY | MAXIMUM O.A.L. 384.00" | MAXIMUM O.A.H. 122.00" | SIDE ROLL AND FRONTAL IMPACT PROTECTION

NOTE

DIMENSIONS SHOWN ARE APPROXIMATE AND ARE SUBJECT TO MINOR DEVIATIONS AS MAY OCCUR OR BE NECESSARY IN CONSTRUCTION.
MINOR DETAILS NOT SHOWN.

1. ONSPOT AUTOMATIC TIRE CHAINS TO BE PROVIDED AT REAR
2. BATTERY CHARGER LOCATED BEHIND DRIVER'S SEAT
3. DUAL L.E.D. LIGHT STRIPS LOCATED IN HOSE BED
4. ONE ADJUSTABLE TILTING SLIDE-OUT TRAY IN COMPARTMENT P2
5. ONE FLOOR MOUNTED SLIDE-OUT TRAY IN COMPARTMENT D1, D3, P1, P3, & R1
6. ONE FULL WITH/DEPTH ADJUSTABLE SHELF LOCATED IN COMPATMENT D2 & P1 TWO IN COMPARTMENT D1, D3, & P3
6. ALL FOLDING STEPS TO BE TRIDENT WITH INTEGRATED L.E.D. LIGHT UNLESS SPECIFIED
7. CIRCUIT BREAKER PANEL IN COMPARTMENT D3
8. ONE HANNAY ELECTRIC REWIND CORD REEL WITH 200' OF 10/3 CABLE MODEL 1618-17-18 LOCATED IN CARGO AREA

REV	DATE	BY	CH
3	26FEB18	MMF	LAB
2	02FEB18	MMF	LAB
1	03NOV17	MMF	CCA

CHASSIS DATA
MAKE: PIERCE
MODEL: ENFORCER

Pierce MANUFACTURING INC.

TITLE: 1500-D-800P W/10 GAL FOAM CELL, 189" PUC RESCUE
(2) XLAYS, LADDERS THRU BODY, GENERATOR, REELS

FOR: SALISBURY MILLS FIRE DISTRICT
SALISBURY MILLS, NEW YORK

DWG NO. 31809AD

JOB NO.	31809
SCALE	1:24
DATE	
DRAWN BY	MMF 25OCT17
CHECKED BY	CCA 27OCT17
SHEET SIZE	D
SHEET NO.	1 OF 1

View File Created 27-FEB-2018 09:08:56