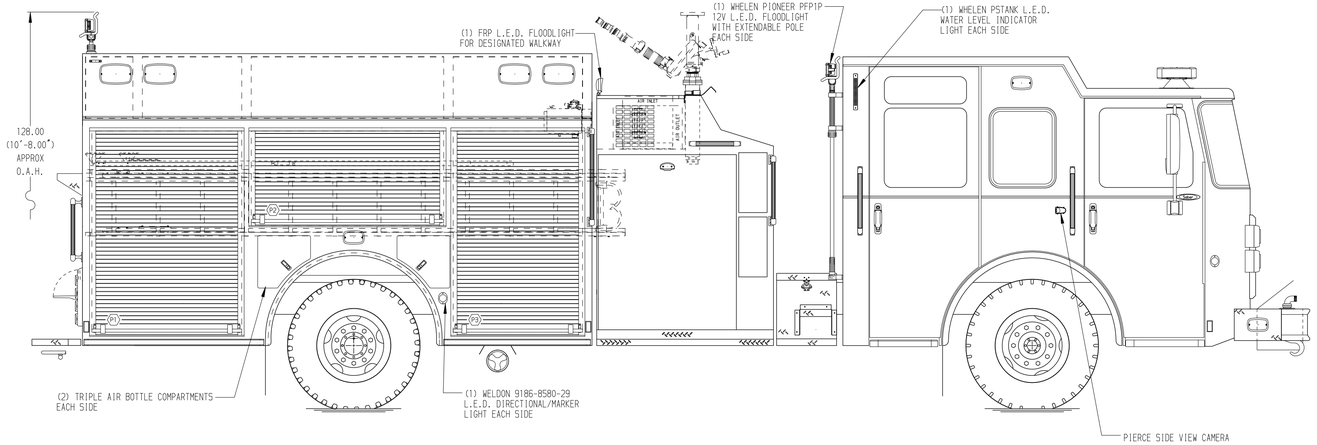

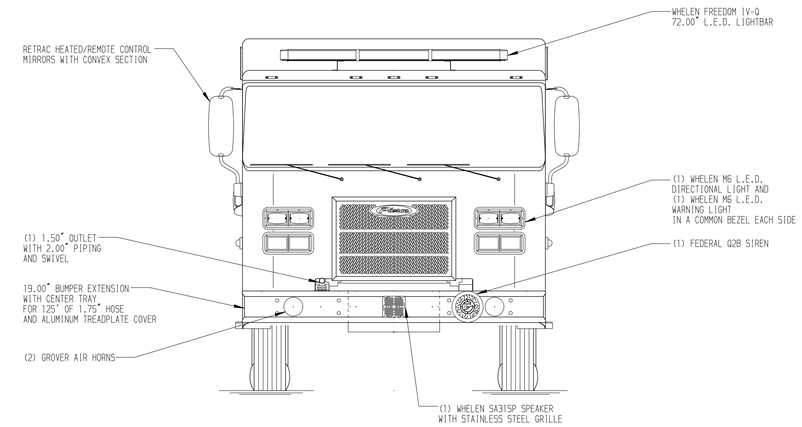

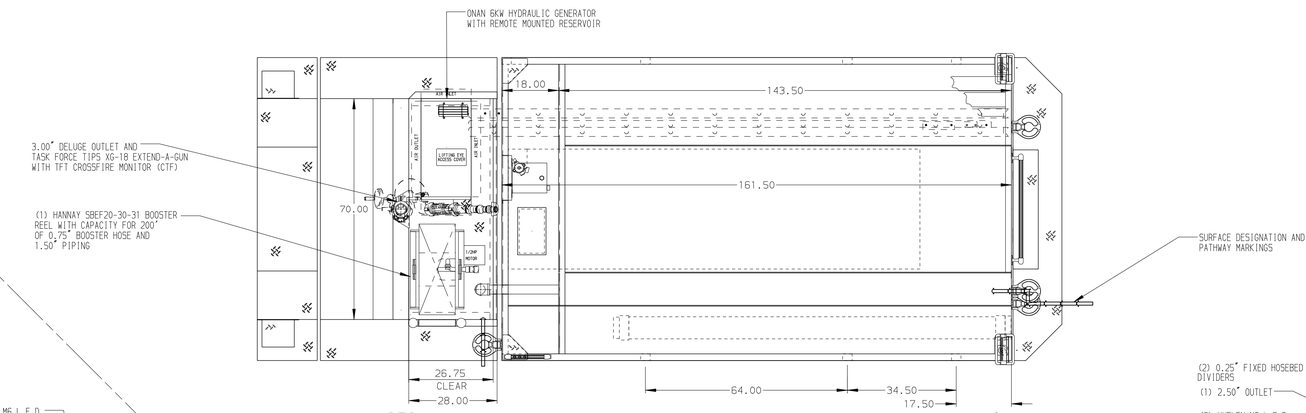

HOSEBED CAPACITIES

1. 200' OF 2.50" HOSE
2. 1200' OF 5.00" HOSE
3. 200' OF 2.50" HOSE

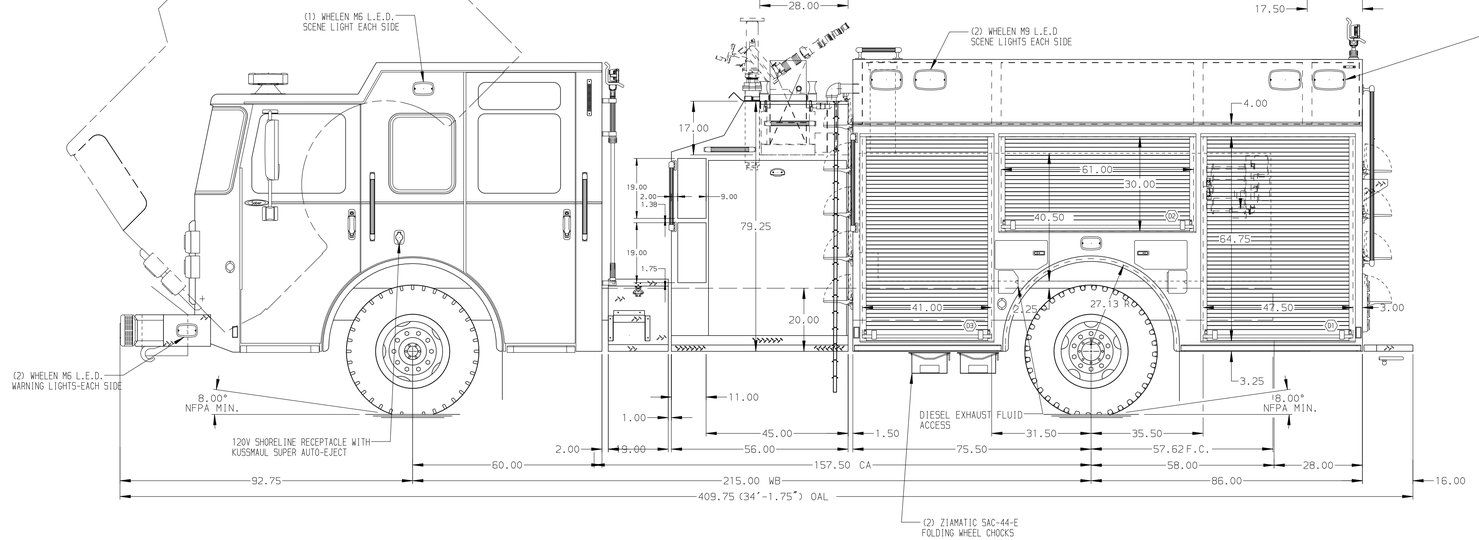

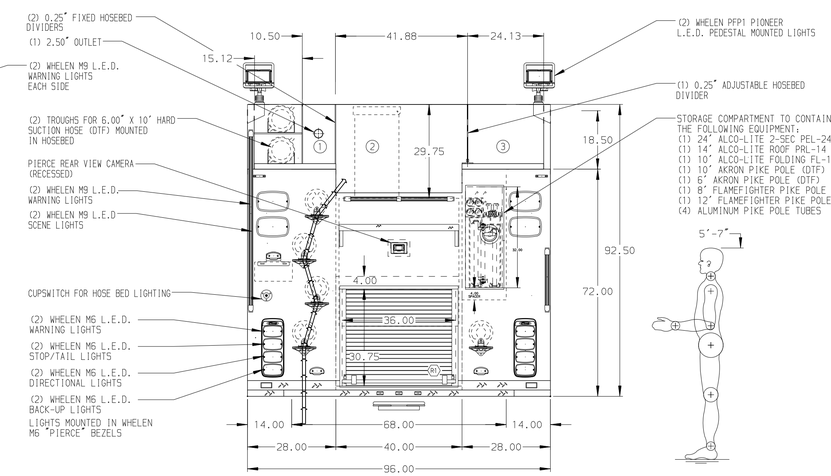

ALUMINUM BODY

NOTE

DIMENSIONS SHOWN ARE APPROXIMATE
AND ARE SUBJECT TO MINOR DEVIATIONS
AS MAY OCCUR OR BE NECESSARY IN
CONSTRUCTION.
MINOR DETAILS NOT SHOWN.

REV	DATE	BY	CH
B	03MAR18	JLA	RWI
A	09FEB18	RWI	JAF

CHASSIS DATA
MAKE: PIERCE
MODEL: SABER FR

Pierce MANUFACTURING INC.

TITLE: 1250-D-750 GAL POLY, 161" BODY
LDRS. BTWN. TANK & SIDE SHEET, (2) SPEEDLAYS, DELUGE

FOR: BELLA VISTA FIRE DEPARTMENT
BELLA VISTA, ARKANSAS

DWG NO.: 31828AD

JOB NO.	31828
SCALE	1:24
DATE	
DRAWN BY	LST 05DEC17
CHECKED BY	AZA 06DEC17
SHEET SIZE	D
SHEET NO.	1 OF 1

View File Created 02-MAR-2018 13:16:14