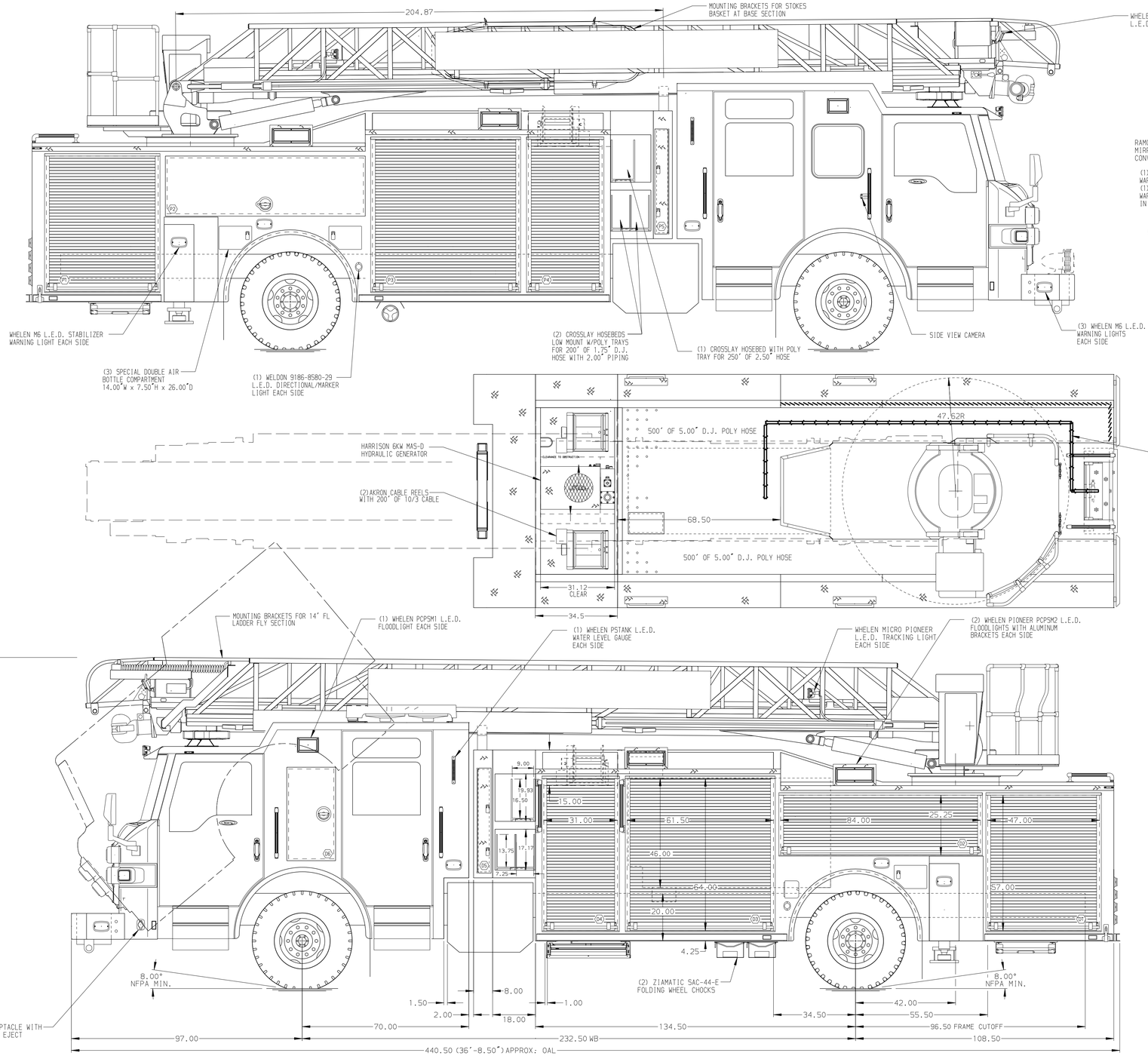

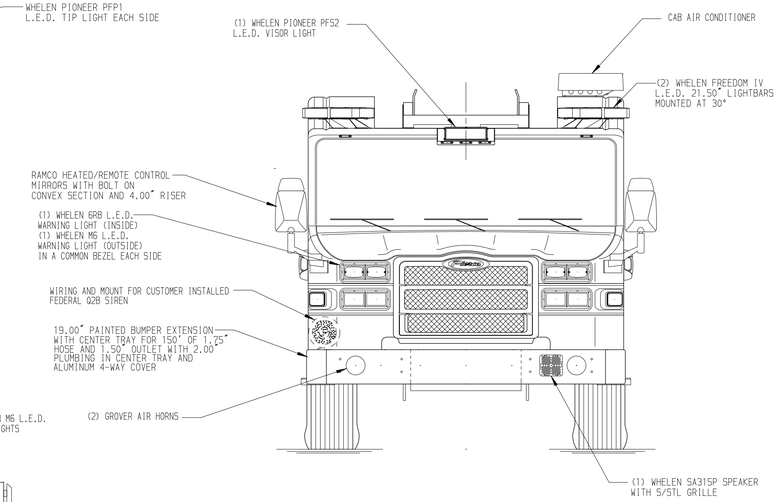

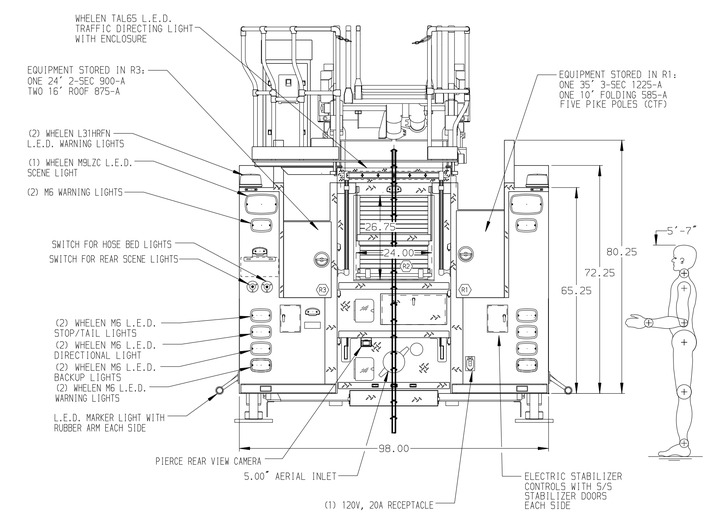

ALUMINUM BODY

SIDE ROLL AND FRONTAL IMPACT PROTECTION

NOTE

DIMENSIONS SHOWN ARE APPROXIMATE AND ARE SUBJECT TO MINOR DEVIATIONS AS MAY OCCUR OR BE NECESSARY IN CONSTRUCTION.
MINOR DETAILS NOT SHOWN.

1. VOGEL LUBE SYSTEM PUMP LOCATED PER SHOP ORDER
2. BATTERY CHARGER LOCATED IN COMPARTMENT P3 HIGH ON FORWARD WALL
3. BATTERY CHARGE INDICATOR LOCATED NEAR DRIVER'S SEAT RISER WITH BRACKET
4. DUAL L.E.D. LIGHT STRIPS LOCATED IN HOSE BED
5. ONE ADJUSTABLE FULL WIDTH/FULL DEPTH SHELF IN COMPARTMENTS D1,D3,P1,P2 & P4, TWO IN P3
6. ONE FLOOR MOUNTED SLIDE-OUT TRAY IN COMPARTMENT D1,P1,P3, & P4
7. AERIAL PEDESTAL RAISED 1.50"
8. L.E.D. LIGHTING ON AERIAL LADDER SECTIONS
9. 120V POWER TO AERIAL TIP
10. FIRE RESEARCH 3-WAY INTERCOM SYSTEM BETWEEN AERIAL TIP,PUMP PANEL & TURNTABLE
11. AIR INLET WITH DISCONNECT COUPLING ON DRIVERS SIDE PUMP PANEL
12. CIRCUIT BREAKER PANEL LOCATED RECESSED IN COMPARTMENT D3

REV	DATE	BY	CH
V	21NOV17	SVA	MSA
V	21NOV17	SVA	MSA
V	18OCT17	SVA	GRM

CHASSIS DATA	
MAKE	PIERCE
MODEL	VELOCITY

Pierce MANUFACTURING INC.

TITLE	75 HAL AERIAL LADDER & BODY ASSEMBLY 500 GALLON WATER TANK
FOR	NORTH COLLIER FIRE & RESCUE DISTRICT NAPLES, FL
DWG NO.	31844AD

JOB NO.	31844
SCALE	1:24
DATE	
DRAWN BY	SVA 090CT17
CHECKED BY	CRI 110CT17
SHEET SIZE	D
SHEET NO.	1 OF 1

View File Created 13-DEC-2017 07:14:29