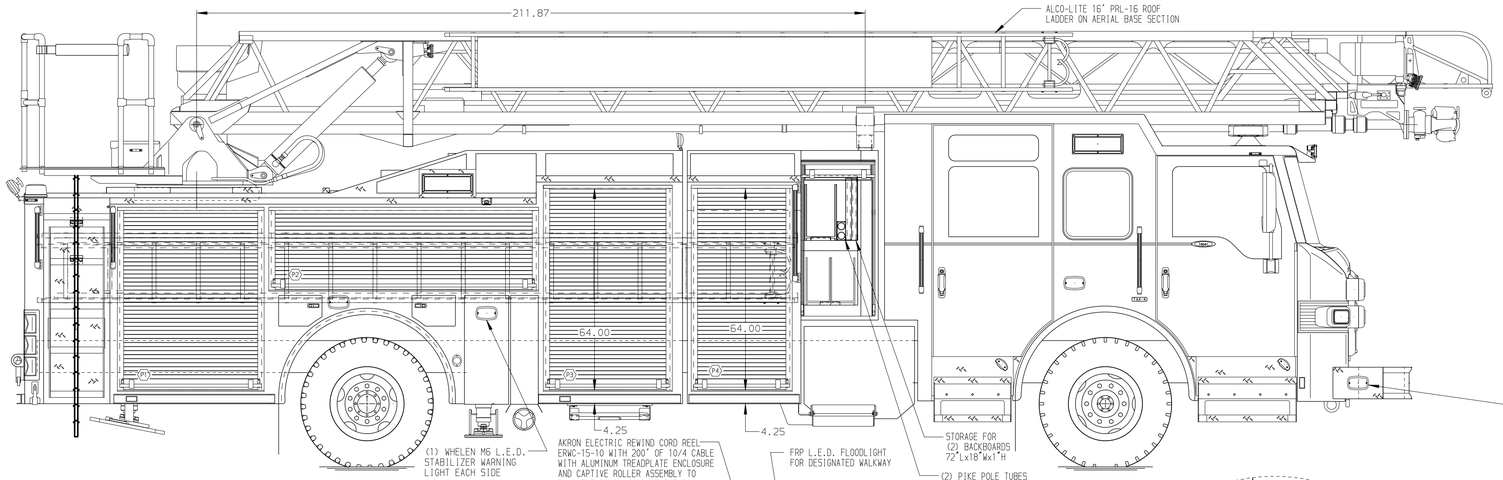

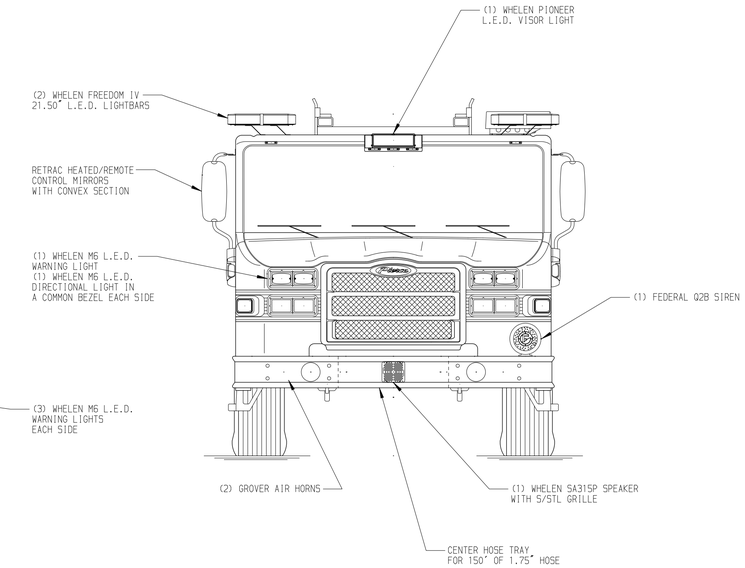

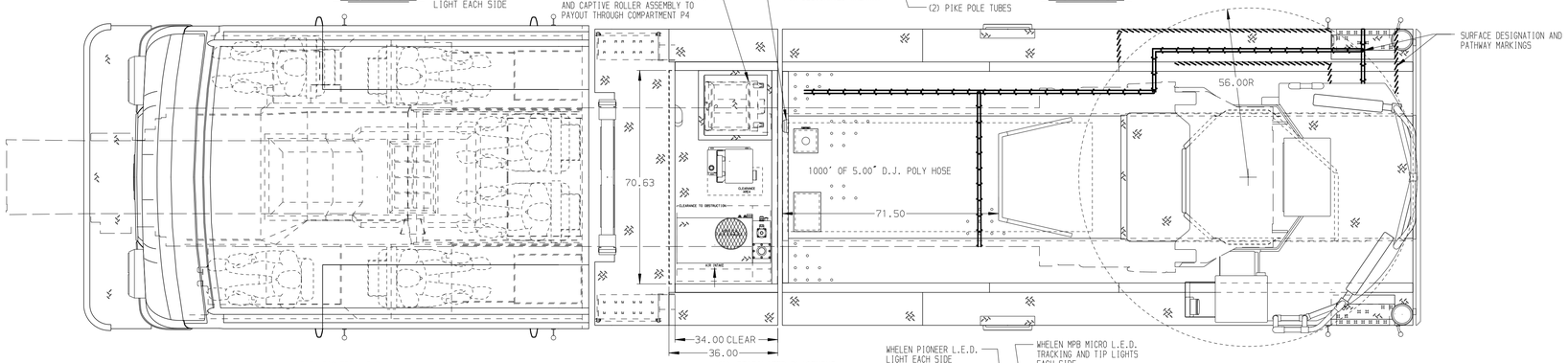

BODY	WATER TANK
107" ASL Aluminum Body PUC	500 Gallon Poly Water Tank
COMPT,DRIVER SIDE FRONT	Foam System
Full Height Rollup Forward	Husky 3 Single Agent Foam System
COMPT,DRIVER SIDE REAR	Foam Cell
Full Height Rollup Rearward	20 Gallon Foam Cell, Non-Reduced Water, PUC
COMPT,PASSENGER SIDE FRONT	
Full Height Rollup Forward	
COMPT,PASSENGER SIDE REAR	
Full Height Rollup Rearward	

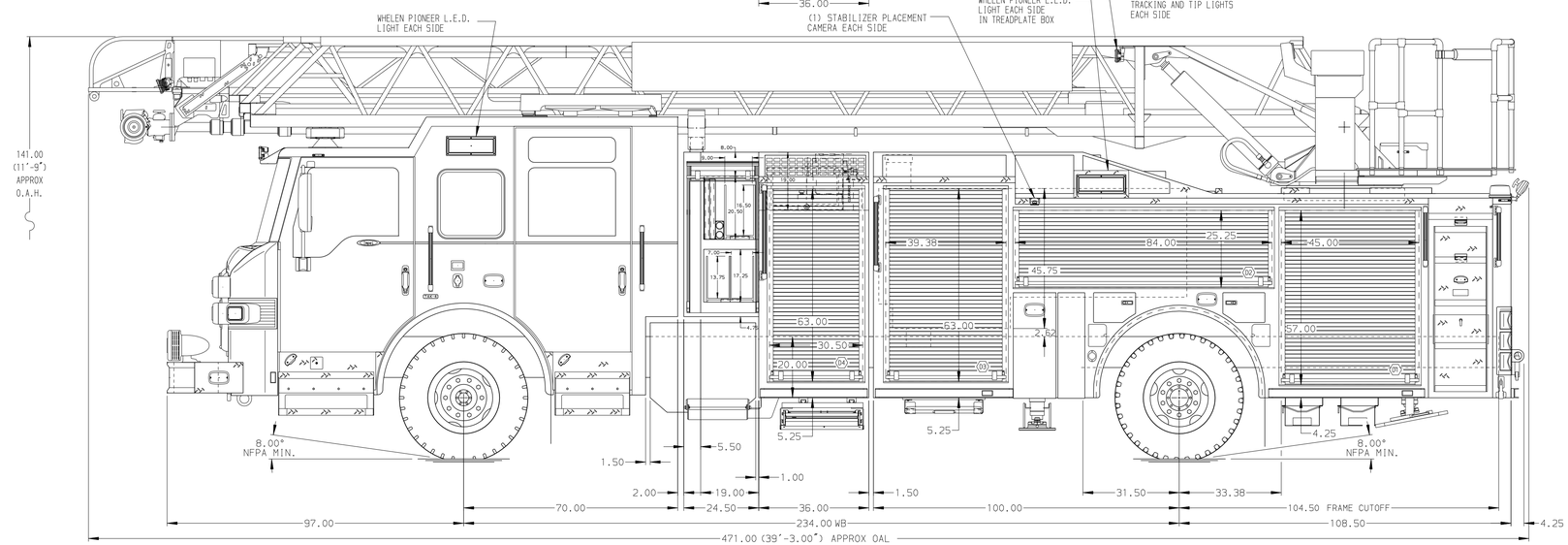

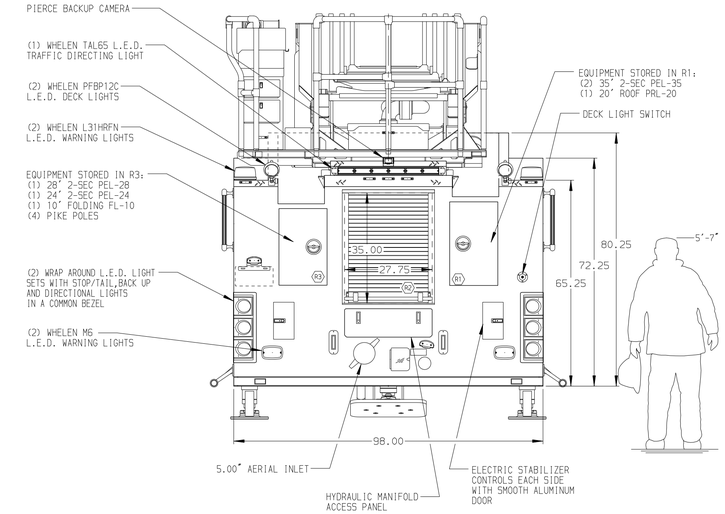

CHASSIS	CAB	AXLE,FRONT,CUSTOM	TRANSMISSION	PUMPHOUSE	CROSSLAYS,1.50"	SPEEDLAYS	SAFETY
Impel Chassis, PUC	7010 Notched Impel FR Cab, PUC	24,000 Lb TAK-4 Axle	Allison 5th Gen, 3000 EVS P	Control Zone, PAL/PAP PUC	(2) 1.50",Full Width Trays,200'	Speedlays Not Required	Side Roll and Frontal Impact Protection
ENGINE	BUMPER	AXLE,REAR		PUMP	CROSSLAYS,2.50"	GENERATOR	
450 HP Cummins L9 Engine	19" Extended Stainless Steel	33,500 Lb Meritor Axle		1500 GPM Pierce PUC	(1) 2.50",Full Width Tray,200'	Harrison 6kW MSV Hydraulic	

CUSTOMER APPROVAL

APPROVED BY: _____

DATE: _____

Pierce MANUFACTURING INC.

NOTE

DIMENSIONS SHOWN ARE APPROXIMATE AND ARE SUBJECT TO MINOR DEVIATIONS AS MAY OCCUR OR BE NECESSARY IN CONSTRUCTION.
MINOR DETAILS NOT SHOWN.

1. ONE 1.50 OUTLET WITH 2.00 PIPING AND SWIVEL LOCATED IN CENTER BUMPER TRAY
2. SHORELINE RECEPTACLE WITH KUSSMAUL SUPER AUTO-EJECT LOCATED ON DRIVER SIDE OF THE CAB
3. AIR INLET WITH DISCONNECT COUPLING IN RECESSED BOX IN THE DRIVER SIDE STEPWELL
4. BATTERY CHARGER LOCATED BEHIND DRIVER'S SEAT
5. BATTERY CHARGE INDICATOR LOCATED ON DRIVER SIDE OF THE CAB
6. SIX ADJUSTABLE SHELVES IN COMPARTMENTS PER SHOP ORDER
7. FOUR FLOOR MOUNTED SLIDE-OUT TRAYS IN COMPARTMENTS PER SHOP ORDER
8. CIRCUIT BREAKER PANEL IN COMPARTMENT D3
9. NON-RAISED AERIAL PEDESTAL
10. 1500 GPM HIGH FLOW WATERWAY
11. AC POWER TO AERIAL TIP

REV	DATE	BY	CH
1	23OCT17	TKA	THS

CHASSIS DATA
MAKE: PIERCE
MODEL: IMPEL

TITLE: 107' ASCENDANT AERIAL LADDER AND BODY ASSEMBLY
FOR: PIERCE FIELD UNIT
APPLETON, WISCONSIN

DWG NO. 31883AD

JOB NO.	31883
SCALE 1:24	DATE
DRAWN BY TKA	21SEP17
CHECKED BY THS	21SEP17
SHEET SIZE D	SHEET NO. 1 OF 1

View File Created 23-OCT-2017 14:10:15