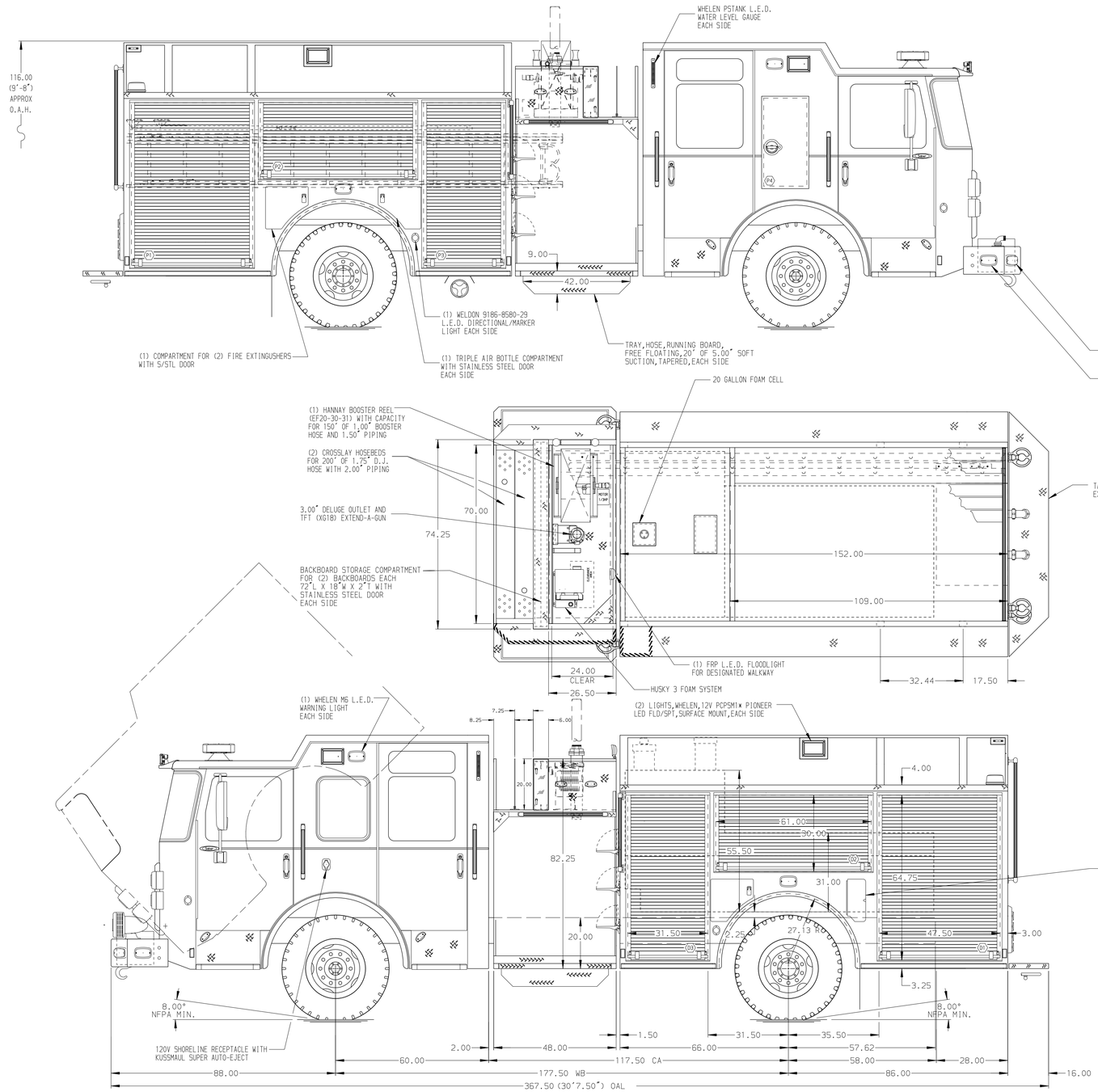

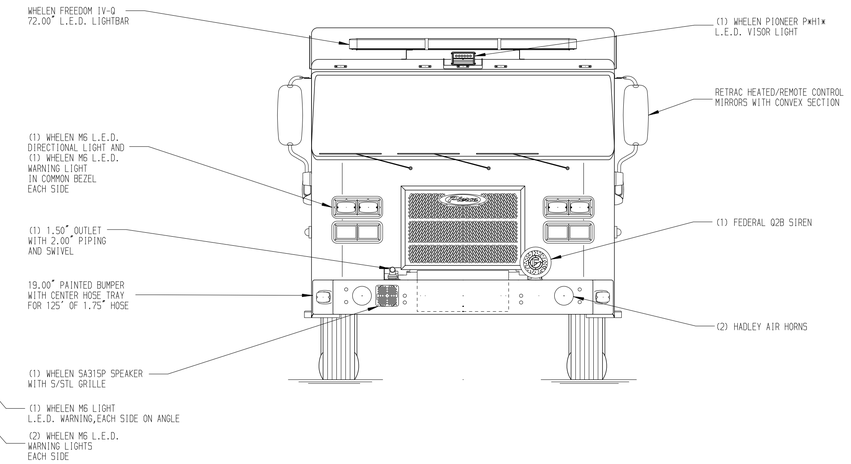

HOSEBED CAPACITIES

1. 200' OF 2.50" D.J. POLY HOSE
2. 800' OF 3.00" D.J. POLY HOSE
3. 1000' OF 5.00" D.J. POLY HOSE
4. 200' OF 3.00" D.J. POLY HOSE

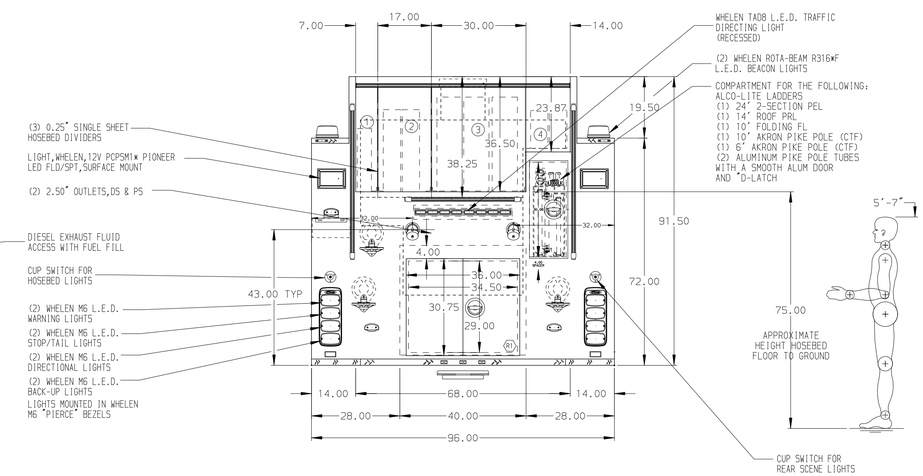

ALUMINUM BODY

NOTE

DIMENSIONS SHOWN ARE APPROXIMATE AND ARE SUBJECT TO MINOR DEVIATIONS AS MAY OCCUR OR BE NECESSARY IN CONSTRUCTION.
MINOR DETAILS NOT SHOWN.

1. WHEEL CHOCKS AND BRACKETS (CTF)
2. AIR INLET/ OUTLET ON D.S. PUMP PANEL
3. ONE ADJUSTABLE FULL WIDTH/DEPTH SHELF IN D1 ,D3, P1, AND P3
4. ONE FLOOR MOUNTED SLIDE-OUT TRAY IN P1
5. 120V DUPLEX RECEPTACLE IN THE P.S. EMS COMPARTMENT
6. BATTERY CHARGER IN D3
7. BATTERY CHARGER INDICATOR ON DRIVER'S SEAT RISER

REV	DATE	BY	CH
7	19APR18	RWI	JLA
6	12APR18	JAF	CAG
5	03APR18	JAF	CAG
4	23MAR18	JAF	CAG

CHASSIS DATA
MAKE: PIERCE
MODEL: SABER FR

Pierce MANUFACTURING INC.

TITLE: 2000-D-730P W/20G FOAM,152",FULL HEIGHT,FLUSH REAR 48" SIDE CONTROL,(2) X-LAYS,DELUGE

FOR: HENRY COUNTY
MCDONOUGH, GEORGIA

DWG NO. 31901AD

JOB NO.	31901 01-02
SCALE	1:24
DATE	
DRAWN BY	LST
30JAN18	
CHECKED BY	SMA
01FEB18	
SHEET SIZE	D
SHEET NO.	1 OF 1

View File Created 20-APR-2018 07:20:39