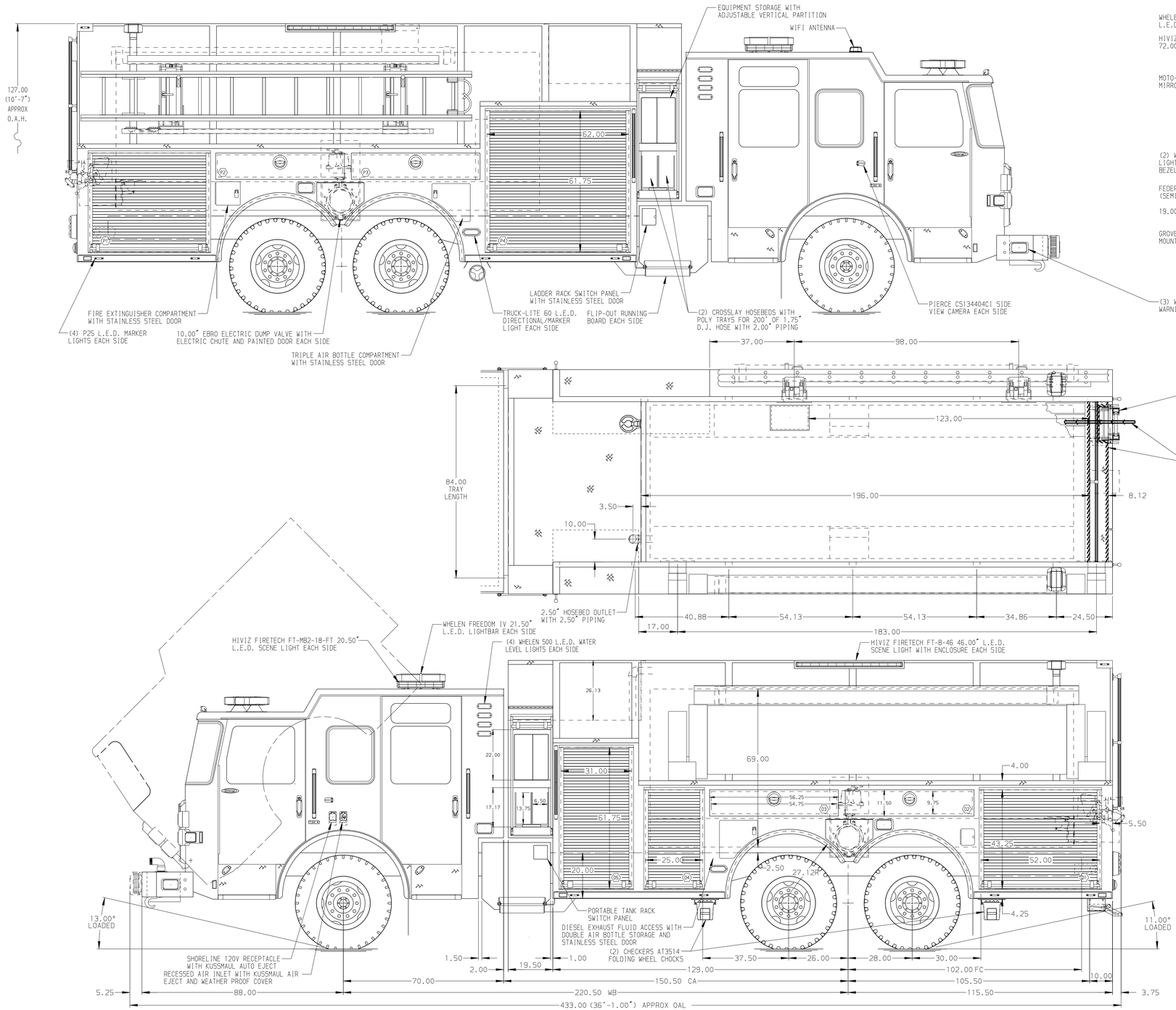

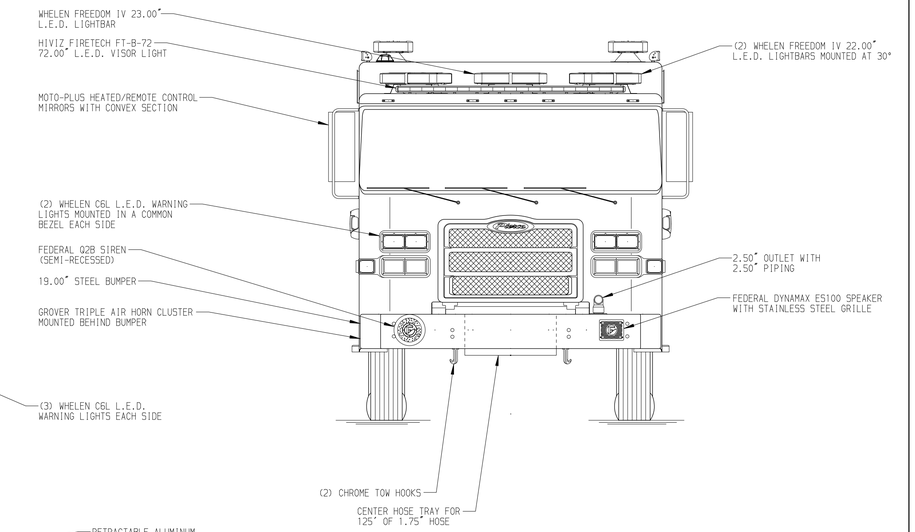

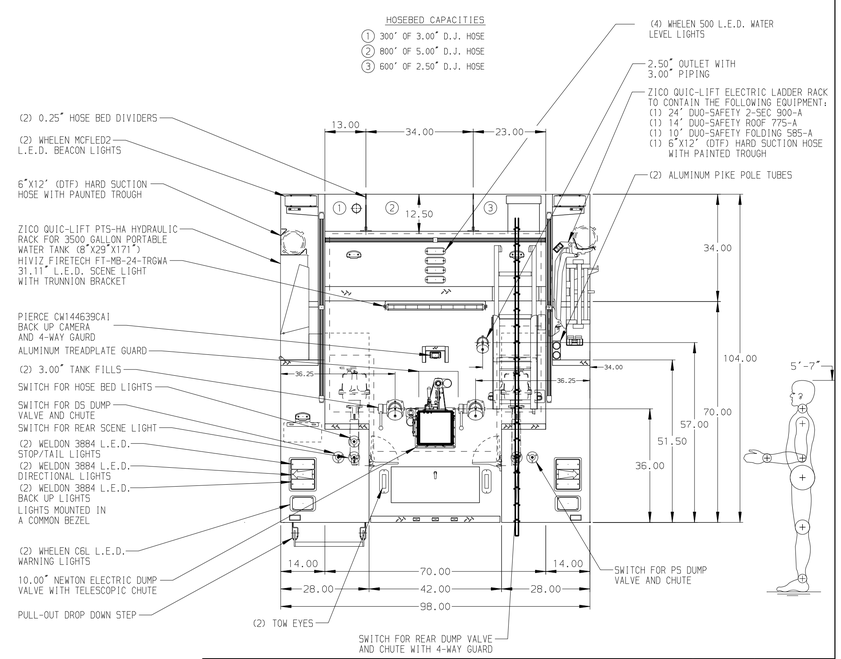

ALUMINUM BODY | MAXIMUM O.A.H. 127.00" | MAXIMUM O.A.L. 433.00" | SIDE ROLL & FRONTAL IMPACT PROTECTION

NOTE

DIMENSIONS SHOWN ARE APPROXIMATE AND ARE SUBJECT TO MINOR DEVIATIONS AS MAY OCCUR OR BE NECESSARY IN CONSTRUCTION.
MINOR DETAILS NOT SHOWN.

1. BATTERY CHARGER/AIR COMPRESSOR MOUNTED BEHIND DRIVER SEAT
2. BATTERY CHARGER INDICATOR LOCATED ON DRIVER SIDE SEAT RISER
3. AMDOR LUMABAR L.E.D. WALKING SURFACE LIGHTING LOCATED IN THE CARGO AREA
4. ONE FULL WIDTH/DEPTH ADJUSTABLE SHELF IN COMPARTMENT-D4
5. ONE DUPLEX RECEPTACLE IN COMPARTMENT-P1
6. ONE 6-PLACE RECEPTACLE STRIP IN CAB

REV	DATE	BY	CH
3	08MAR18	MMF	DTS
2	02FEB18	MMF	CSH
1	07DEC17	BST	NPA

CHASSIS DATA
MAKE: PIERCE
MODEL: ENFORCER

Pierce MANUFACTURING INC.

TITLE: 1500-D-3000P,244 PUC TANKER,CROSSLAYS,DUMP VALVES
ZICO PORTABLE TANK RACK,ZICO LADDER RACK

FOR: KINZER FIRE COMPANY
KINZER, PA

DWG NO.: 31937AD

JOB NO.	31937
SCALE	1:24
DATE	
DRAWN BY	BST 17NOV17
CHECKED BY	NPA 21NOV17
SHEET SIZE	D
SHEET NO.	1 OF 1

View File Created 08-MAR-2018 07:30:51