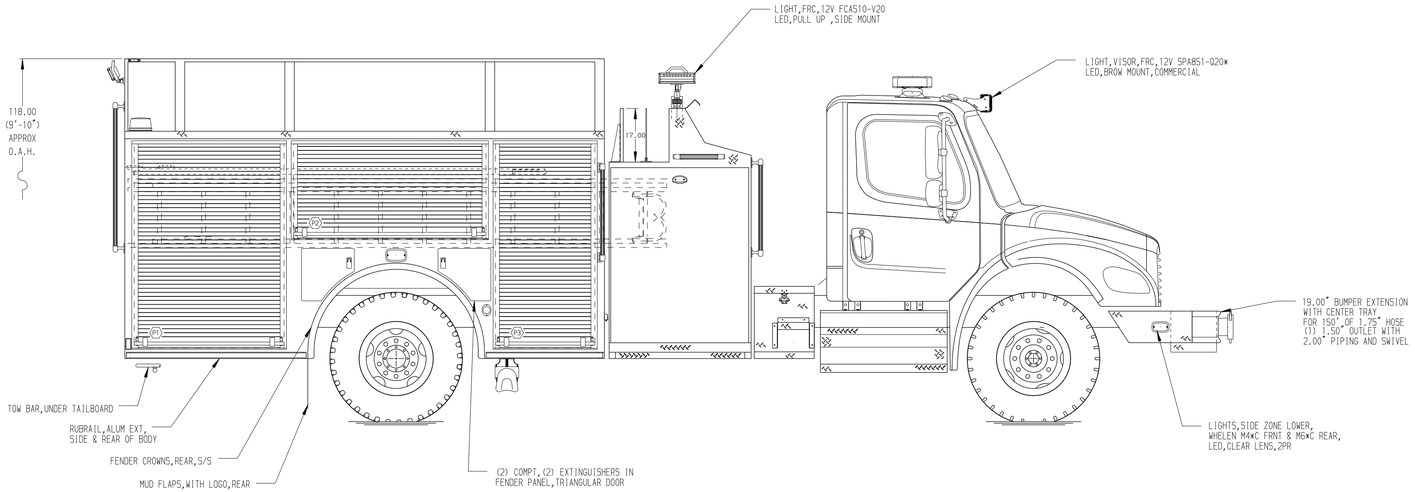

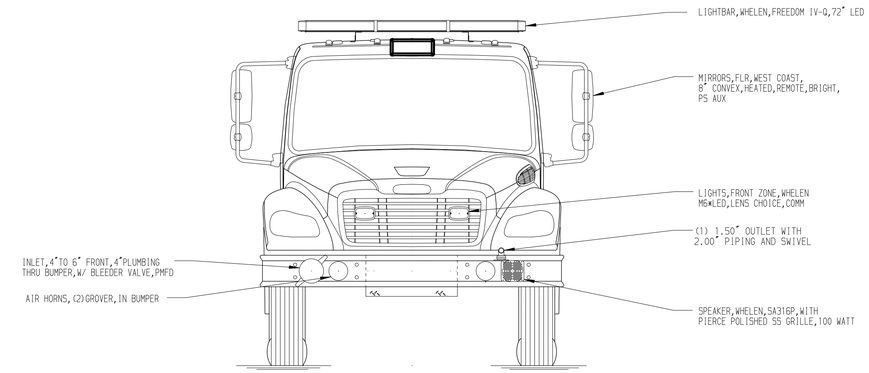

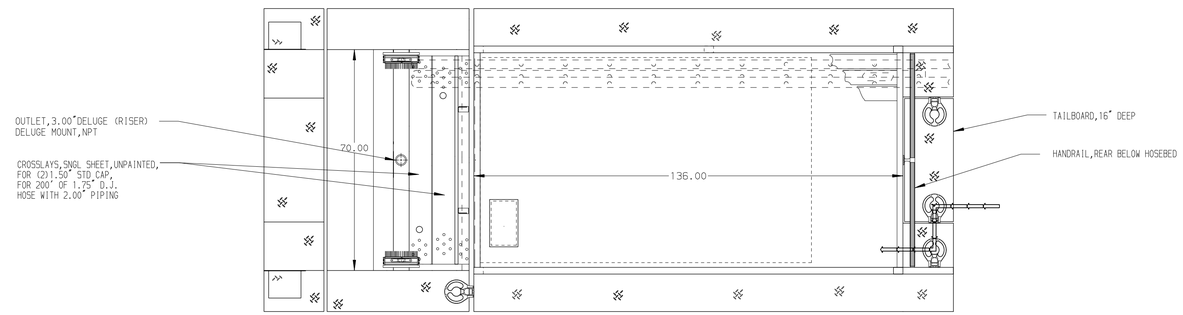

HOSEBED CAPACITIES

1. 800' OF 5.00" D.J. POLYESTER HOSE
2. 500' OF 2.50" D.J. POLYESTER HOSE
3. 500' OF 1.75" D.J. POLYESTER HOSE

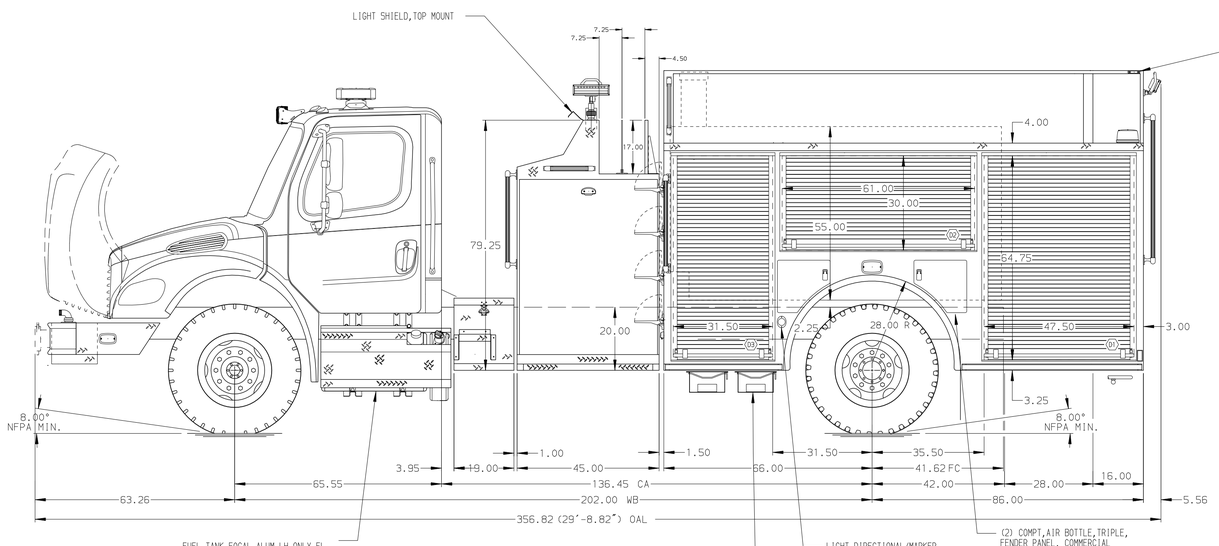

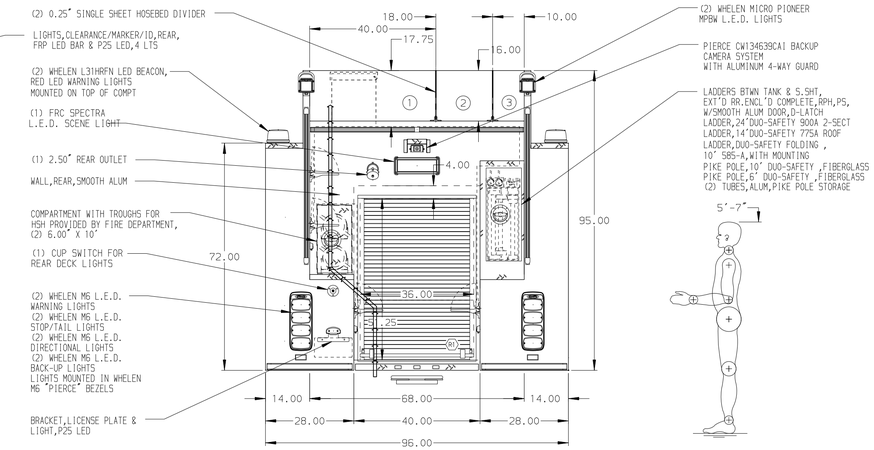

ALUMINUM BODY

NOTE

DIMENSIONS SHOWN ARE APPROXIMATE
AND ARE SUBJECT TO MINOR DEVIATIONS
AS MAY OCCUR OR BE NECESSARY IN
CONSTRUCTION.
MINOR DETAILS NOT SHOWN.

REV	DATE	BY	CH
7	29MAR18	JLA	NAS
6	01MAR18	RWI	NAS
5	22NOV17	RWI	JAF

CHASSIS DATA
MAKE: FL
MODEL: M2-106

Pierce MANUFACTURING INC.
BRADENTON, FLORIDA

TITLE: 1500-D-1000 POLY,152"BODY DS & PS FULL HGT,FDLER 45"TOP MNT W/19"WALKWAY,(2)1.5"CROSSLAYS

FOR: HAMLIN TOWNSHIP FIRE DEPARTMENT
LUDINGTON, MICHIGAN

DWG NO.: 31946AD

JOB NO.	31946
SCALE	1:24
DATE	240CT17
DRAWN BY	JLA
CHECKED BY	260CT17
SHEET SIZE	D
SHEET NO.	1 OF 1

View File Created 29-MAR-2018 08:50:54