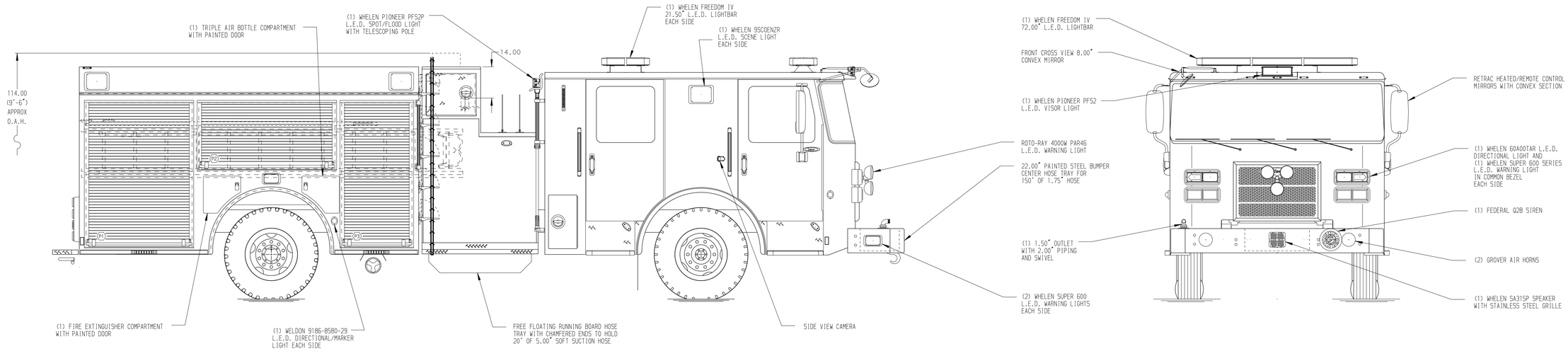

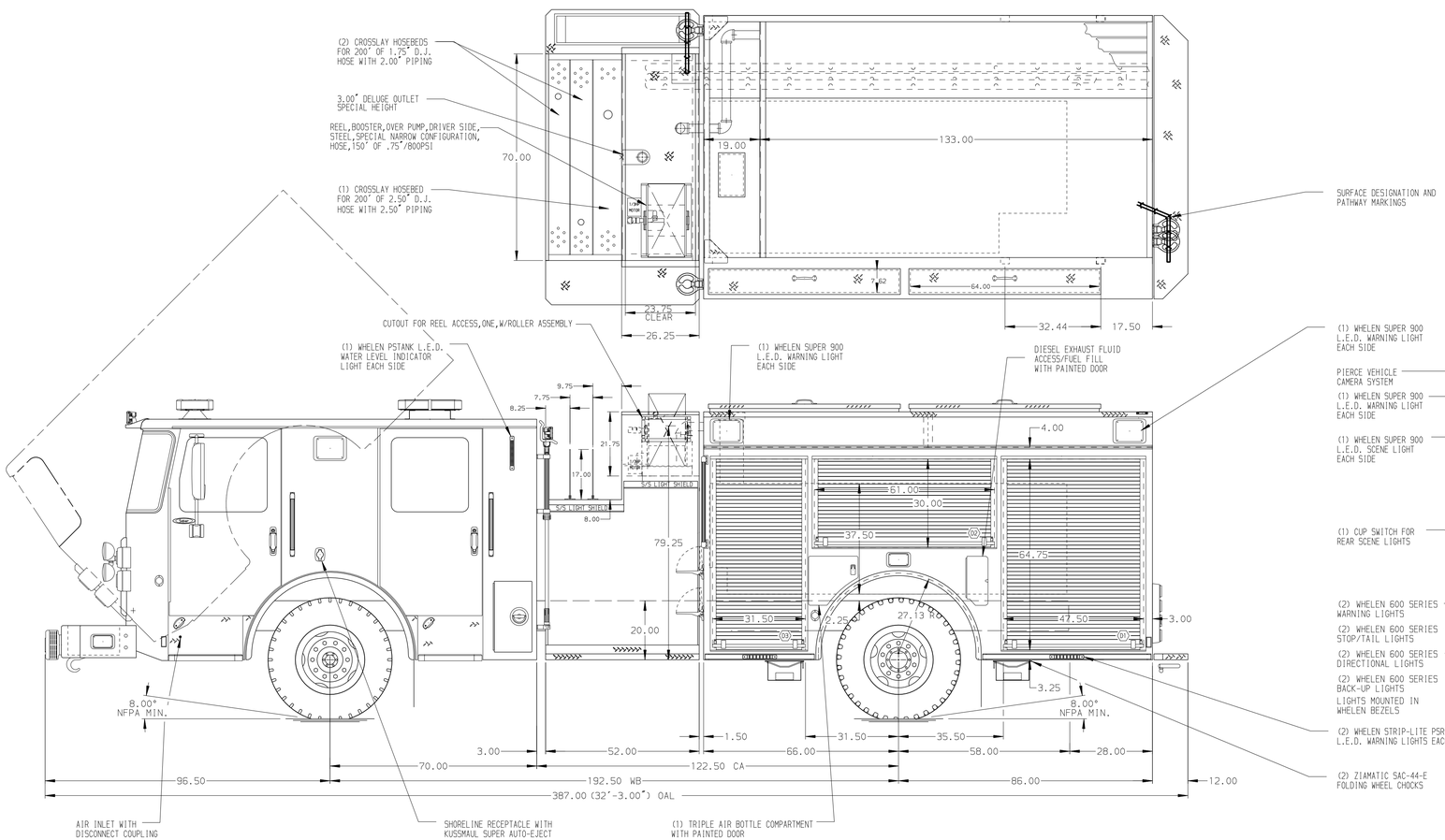

HOSEBED CAPACITIES

1. 1000' OF 5.00" D.J. POLY HOSE
2. 400' OF 3.00" D.J. POLY HOSE
3. 200' OF 2.50" D.J. POLY HOSE

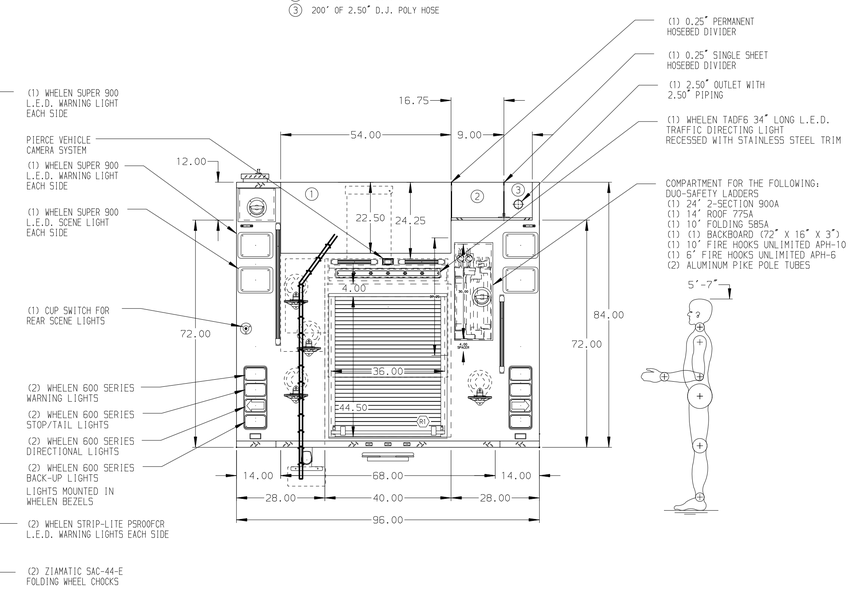

ALUMINUM BODY

MAXIMUM O.A.H. 115.00"

NOTE

DIMENSIONS SHOWN ARE APPROXIMATE AND ARE SUBJECT TO MINOR DEVIATIONS AS MAY OCCUR OR BE NECESSARY IN CONSTRUCTION.
MINOR DETAILS NOT SHOWN.

REV	DATE	BY	CH
B	16MAY18	RWI	GSC
A	01MAY18	JAF	GSC

CHASSIS DATA
MAKE: PIERCE
MODEL: SABER FR

Pierce MANUFACTURING INC.

TITLE: 1500-D-750P 152" BODY DS FH FRONT, FH & DEPTH REAR PS FH FRONT & REAR FDLER,(3)XLAYS, LADDERS THRU BODY

FOR: NEW PROSPECT FIRE DEPARTMENT INMAN, SOUTH CAROLINA

DWG NO. 31949AD

JOB NO.	31949
SCALE	1:24
DATE	
DRAWN BY	MMF
	12FEB18
CHECKED BY	CDU
	20FEB18
SHEET SIZE	D
SHEET NO.	1 OF 1

View File Created 16-MAY-2018 11:03:41