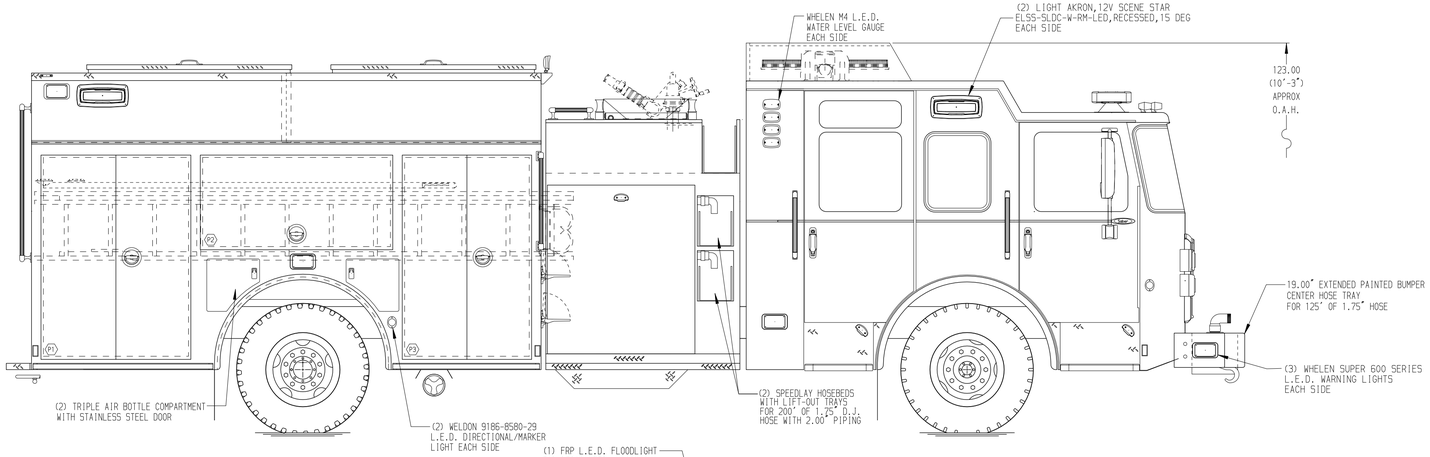

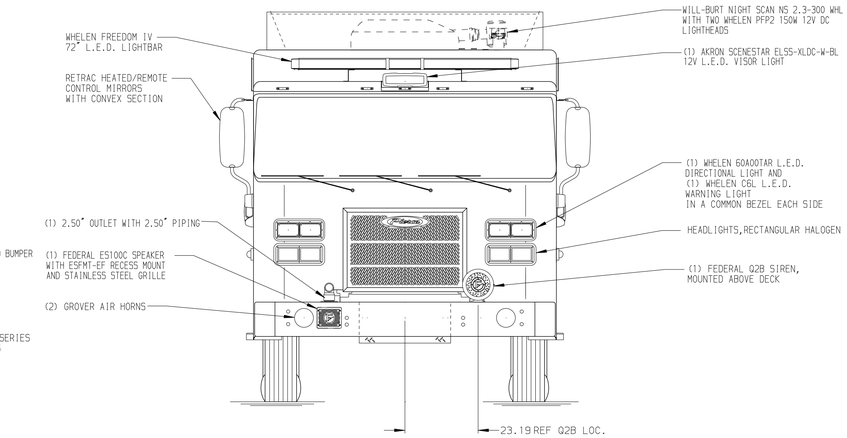

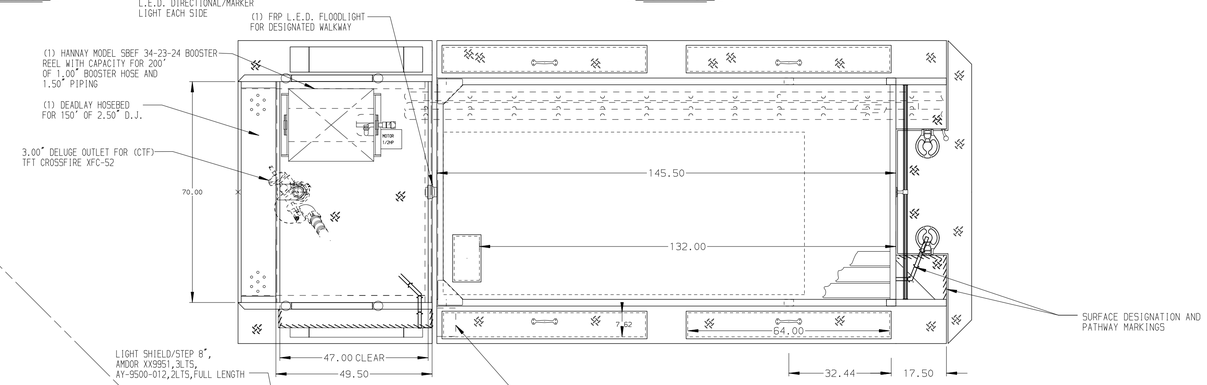

HOSEBED CAPACITIES

1. - 1000' OF 5.00" LDH HOSE
2. - 600' OF 2.50" D.J. POLY HOSE
3. - 250' OF 1.75" D.J. POLY HOSE

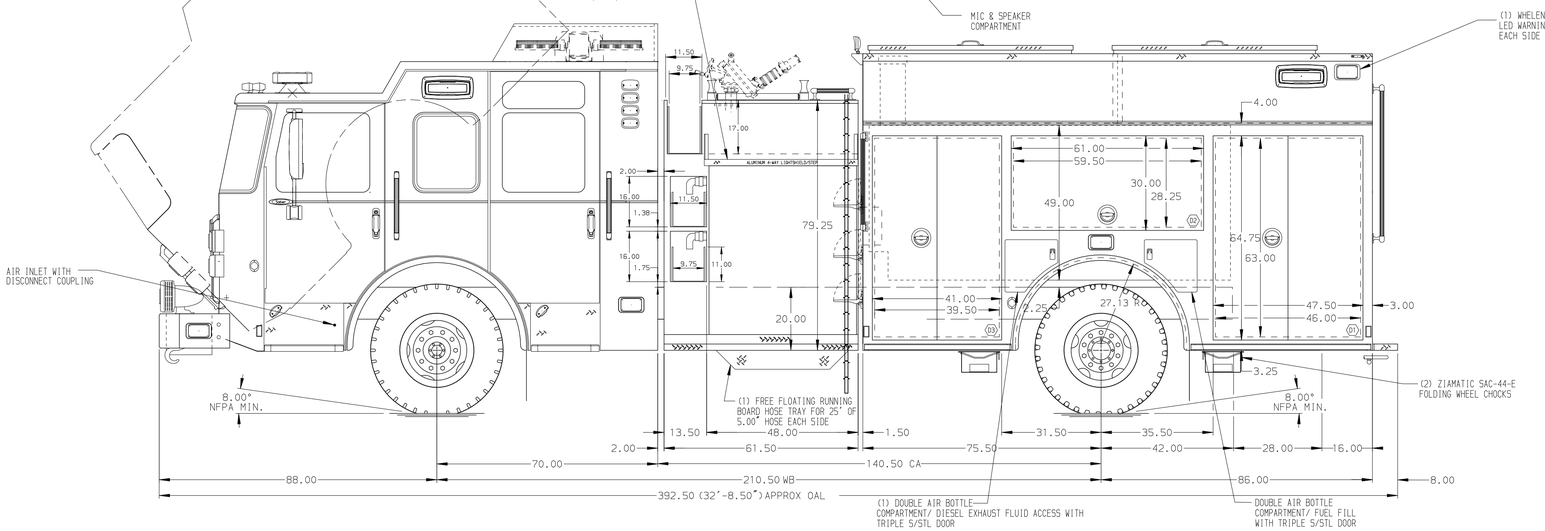

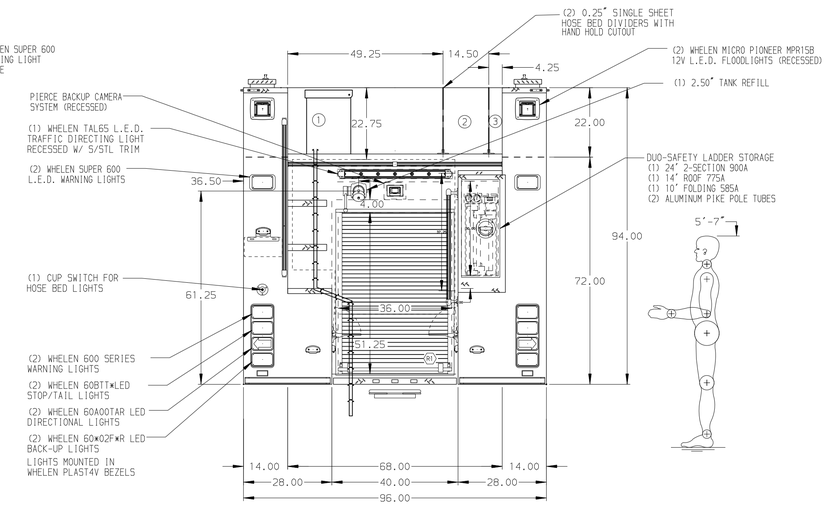

ALUMINUM BODY

NOTE

DIMENSIONS SHOWN ARE APPROXIMATE AND ARE SUBJECT TO MINOR DEVIATIONS AS MAY OCCUR OR BE NECESSARY IN CONSTRUCTION.
MINOR DETAILS NOT SHOWN.

REV	DATE	BY	CH
3	01MAY18	JLA	NAS
2	13APR18	JLA	NAS
1	05MAR18	LME	NAS

CHASSIS DATA
MAKE: PIERCE
MODEL: SABER FR

Pierce MANUFACTURING INC.

TITLE: 1500-D-1000,161",FULL HEIGHT FRONT & REAR, FDLER (2) SPEEDLAYS,DELUGE,BOOSTER REEL
FOR: BYHALIA FIRE DEPARTMENT BYHALIA, MISSISSIPPI
DWG NO.: 31990AD

JOB NO.	SCALE	DRAWN BY	CHECKED BY	SHEET SIZE	SHEET NO.
–	1:24	MMF	AJA	D	1 OF 1

DATE: 26FEB18 26FEB18

View File Created 01-MAY-2018 12:52:28