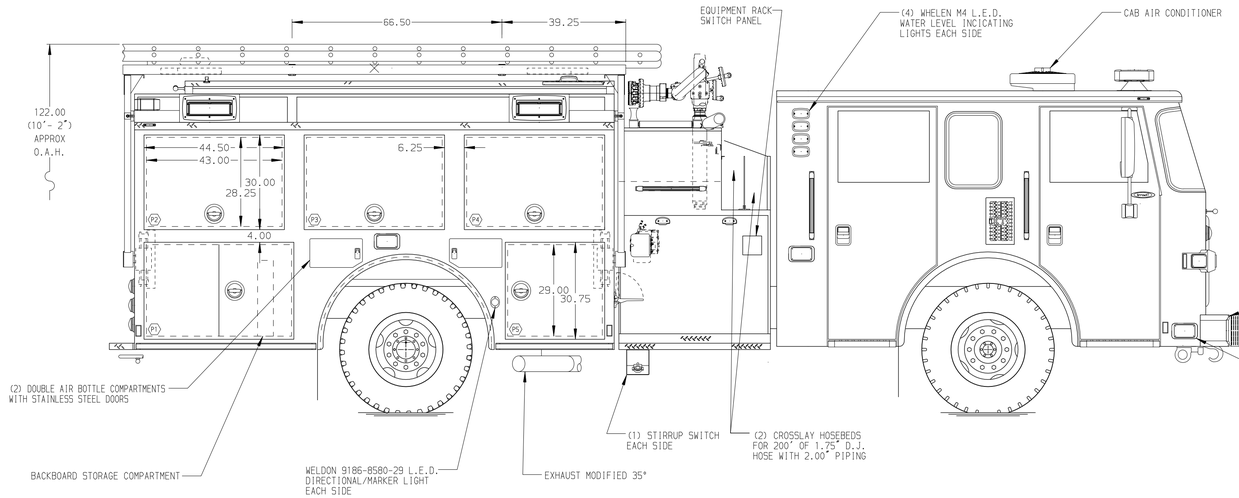

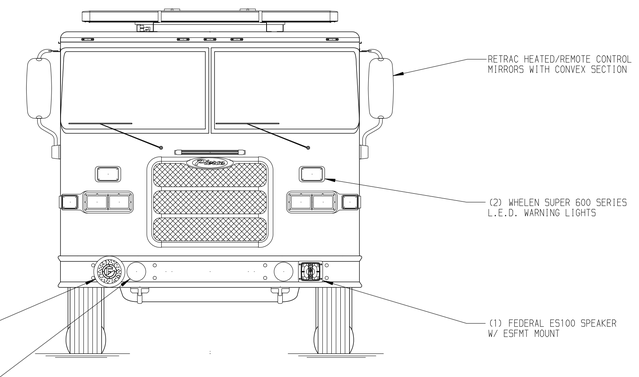

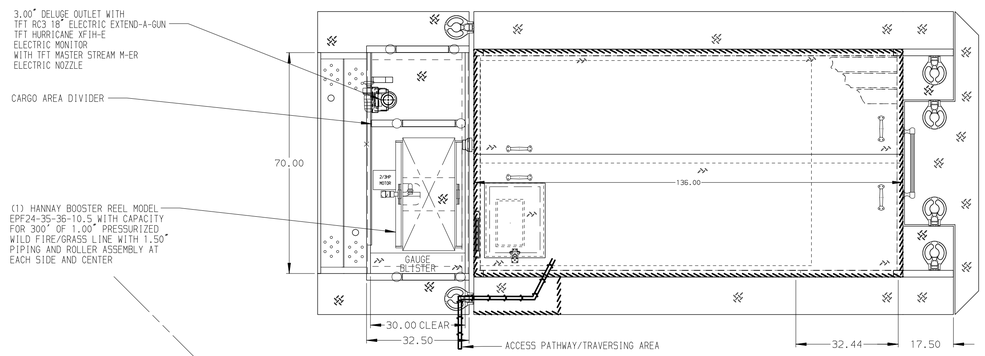

HOSEBED CAPACITIES

1. 700' OF 1.75" D.J. POLYESTER HOSE
2. 1000' OF 5.00" D.J. POLYESTER HOSE
3. 700' OF 2.50" D.J. POLYESTER HOSE

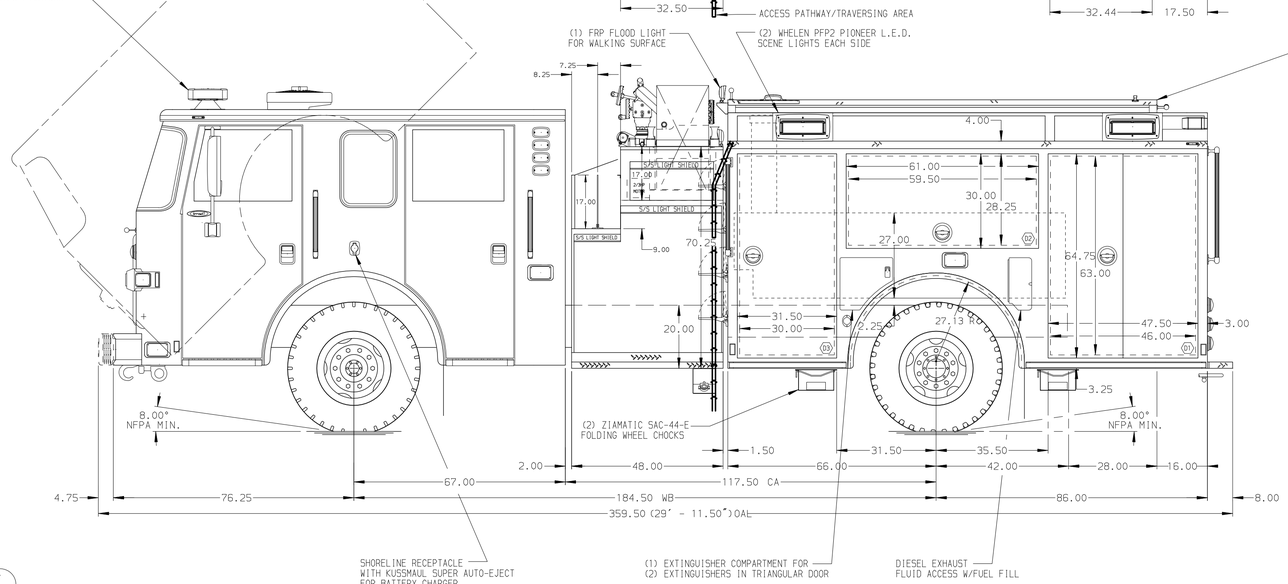

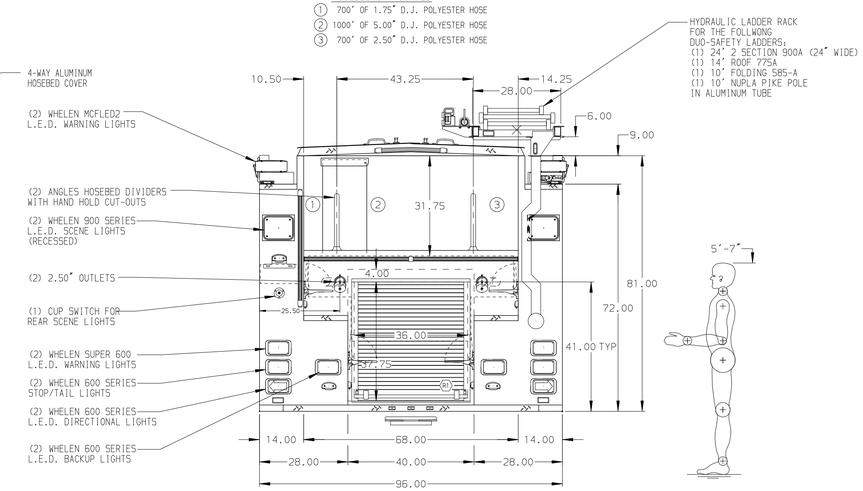

ALUMINUM BODY

NOTE

DIMENSIONS SHOWN ARE APPROXIMATE AND ARE SUBJECT TO MINOR DEVIATIONS AS MAY OCCUR OR BE NECESSARY IN CONSTRUCTION.
MINOR DETAILS NOT SHOWN.

1. INSTA-CHAIN AUTOMATIC TIRE CHAINS TO BE PROVIDED AT REAR
2. AIR INLET WITH DISCONNECT COUPLING LOCATED ON DRIVER'S STEP WELL
3. VOGEL LUBE SYSTEM PUMP LOCATED PER SHOP ORDER
4. KUSSMAUL BATTERY CHARGER LOCATED BEHIND DRIVER'S SEAT
5. BATTERY CHARGE INDICATOR LOCATED NEAR DRIVER'S SEAT RISER WITH BRACKET
6. REVERSED HINGED DOOR ON COMPARTMENT D3
7. ONE ADJUSTABLE FULL WIDTH/DEPTH SHELF NOTCHED LOCATED IN COMPARTMENT D1, P1 & P5
8. TWO ADJUSTABLE FULL WIDTH/DEPTH SHELFS LOCATED IN COMPARTMENT D3, THREE IN D1
9. ONE SMOOTH ALUMINUM TOOL BOARD WITH TRACKS IN COMPARTMENT D2, P2, P3 & P4
10. PARTITION BETWEEN COMPARTMENTS P1/R1
11. DELETE PARTITION BETWEEN COMPARTMENT P2, P3 & P4

REV	DATE	BY	CH
7	16FEB18	AMI	LPA
6	20DEC17	AMI	SMA

CHASSIS DATA
MAKE: PIERCE
MODEL: ARROW XT

Pierce MANUFACTURING INC.

TITLE: 1500-D-500 GALLON POLY, 152" FDLER, HLR (2)CROSSLAYS, DELUGE, BOOSTER REEL
FOR: BOISE CITY FIRE DEPARTMENT, BOISE, IDAHO
DWG NO.: 31998AD

JOB NO.	31998
SCALE	1:24
DATE	
DRAWN BY	AMI 13DEC17
CHECKED BY	SMA 13DEC17
SHEET SIZE	D
SHEET NO.	1 OF 1

View File Created 16-FEB-2018 10:30:05