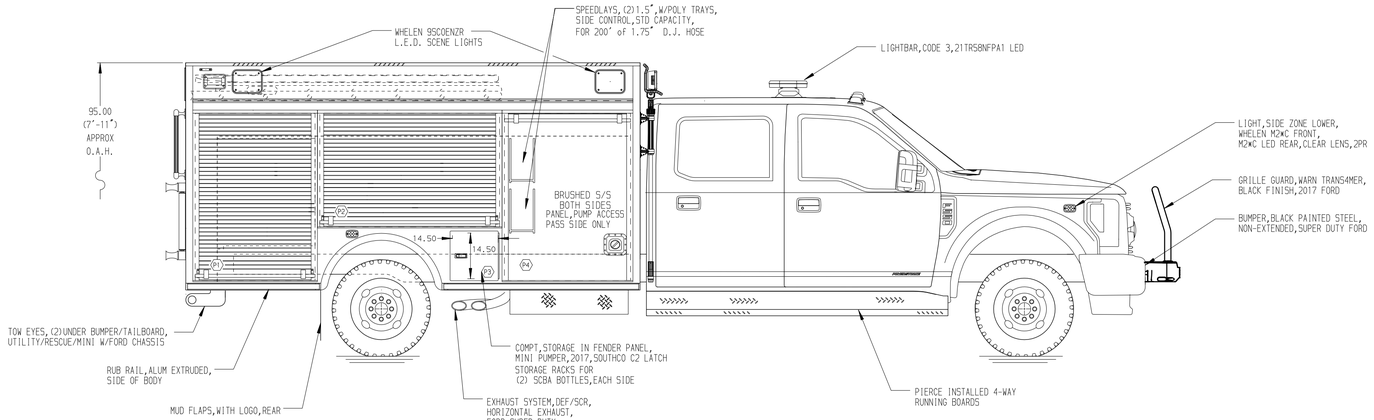

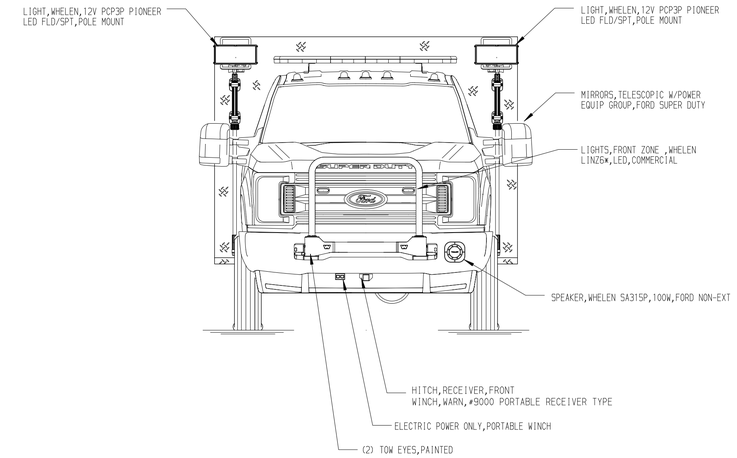

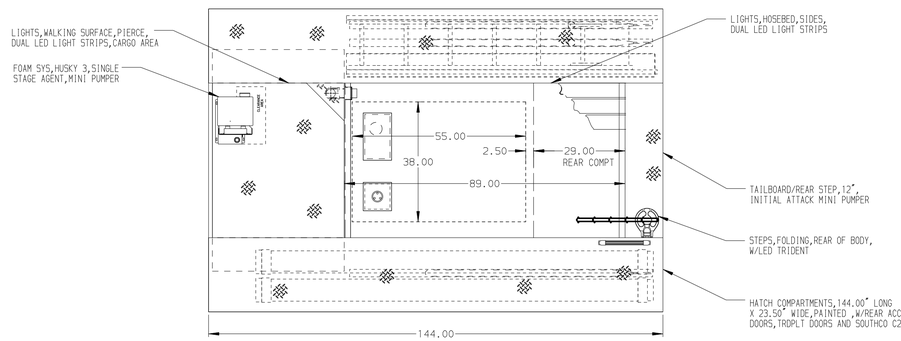

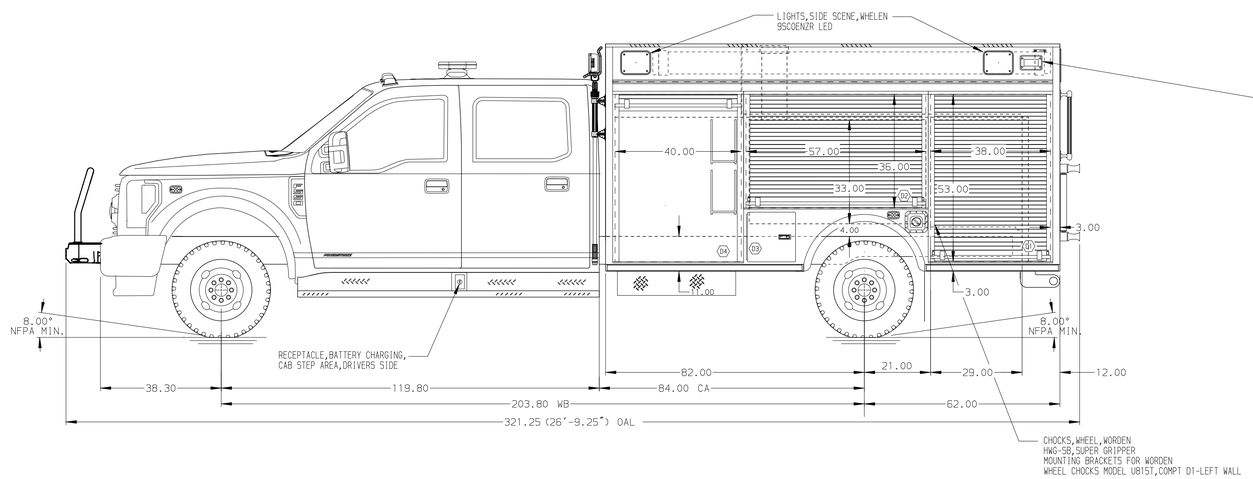

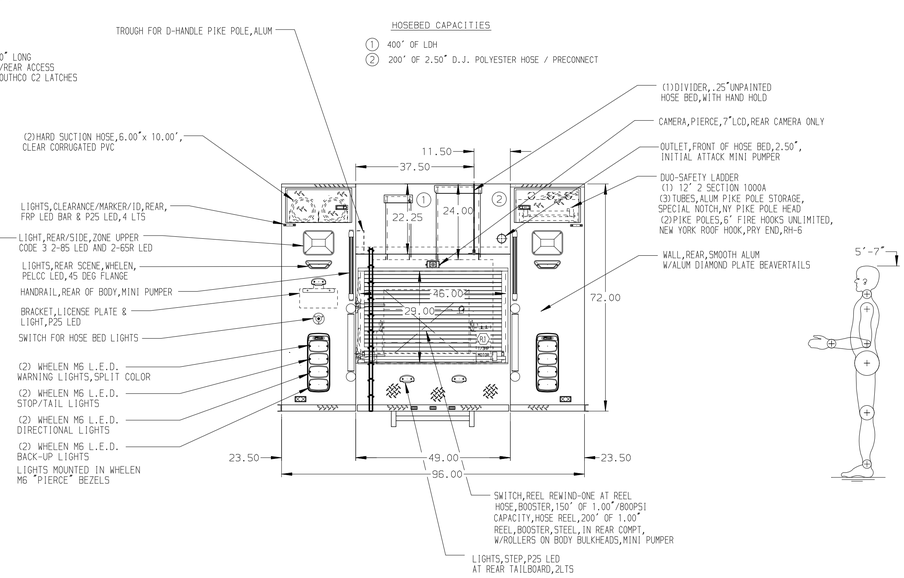

ALUMINUM BODY

NOTE

DIMENSIONS SHOWN ARE APPROXIMATE
AND ARE SUBJECT TO MINOR DEVIATIONS
AS MAY OCCUR OR BE NECESSARY IN
CONSTRUCTION.
MINOR DETAILS NOT SHOWN.

REV.	DATE	BY	CHK'D	
				CHASSIS DATA
V	15MAY18	JAF	NAS	CHASSIS
V	03JAN18	JAF	NAS	FORD
V	03JAN18	RWI	JAF	MODEL F-550 4X4

Pierce MANUFACTURING INC.
BRADENTON, FLORIDA

TITLE	1500-D-245 POLY, 5 FOAM, 84"CA, MINI PUMPER BODY (2) SPEEDLAYS	JOB NO. 32029	
		DATE 27NOV17	SCALE 1:24
FOR	NORTH BEAVER TOWNSHIP VFD NEW CASTLE, PENNSYLVANIA	30NOV17	DRAWN BY JAF
			CHK'D BY RWI
DRWG. NO.	32029AD	SHEET NO. 1 OF 1	SHEET SIZE D

View File Created 15-MAY-2018 14:01:20