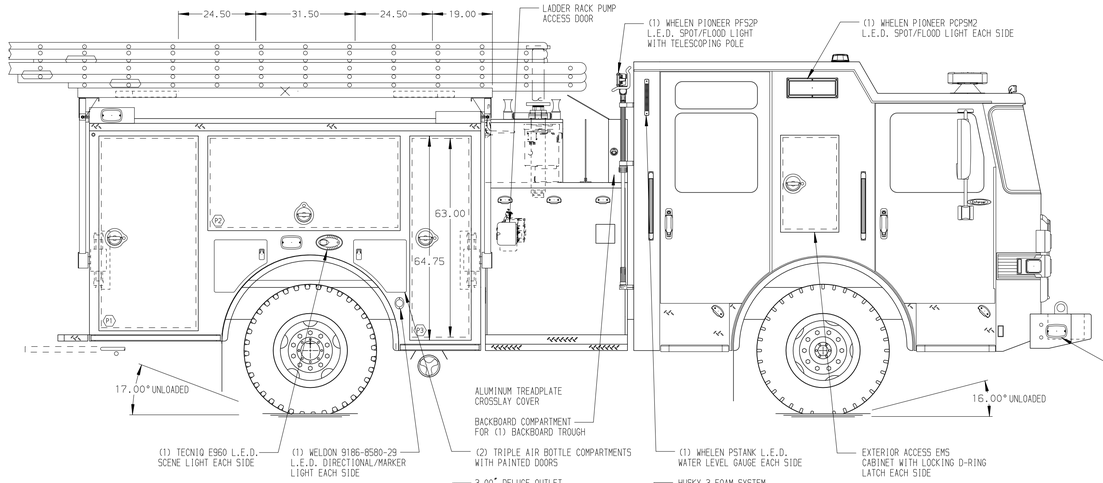

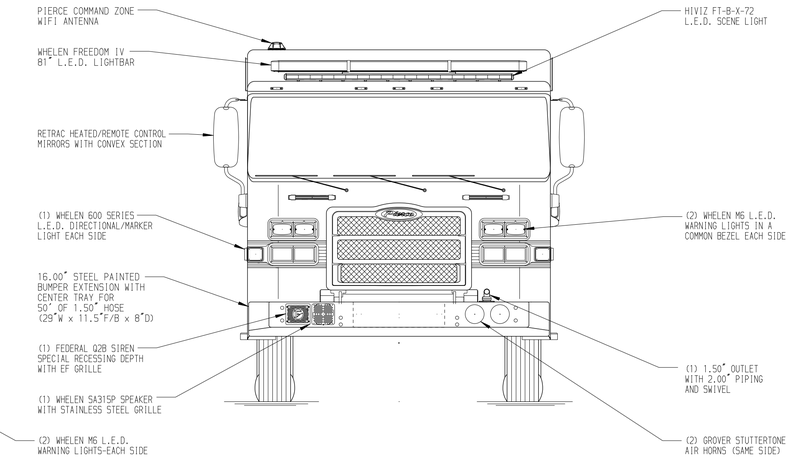

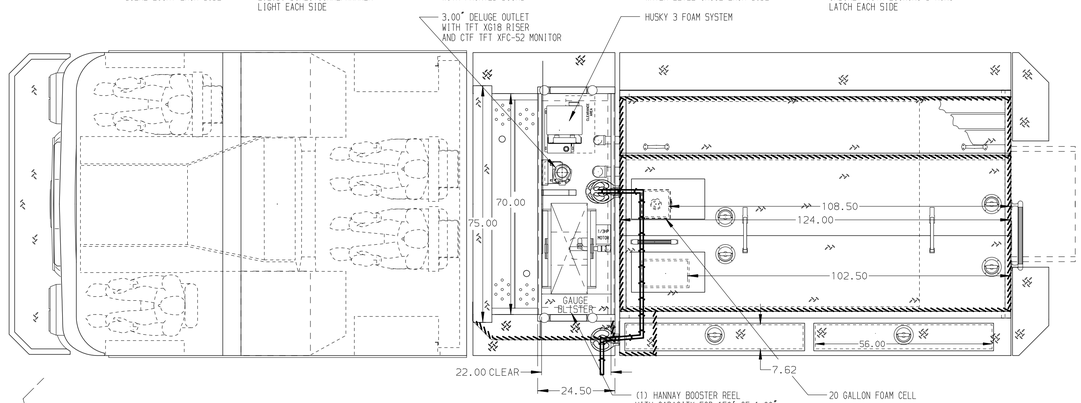

HOSEBED CAPACITIES

1. 800' OF 2.50" HOSE
2. 800' OF 5.00" HOSE
3. 200' OF 2.50" HOSE
4. 200' OF 1.50" HOSE
5. 100' OF 1.50" HOSE

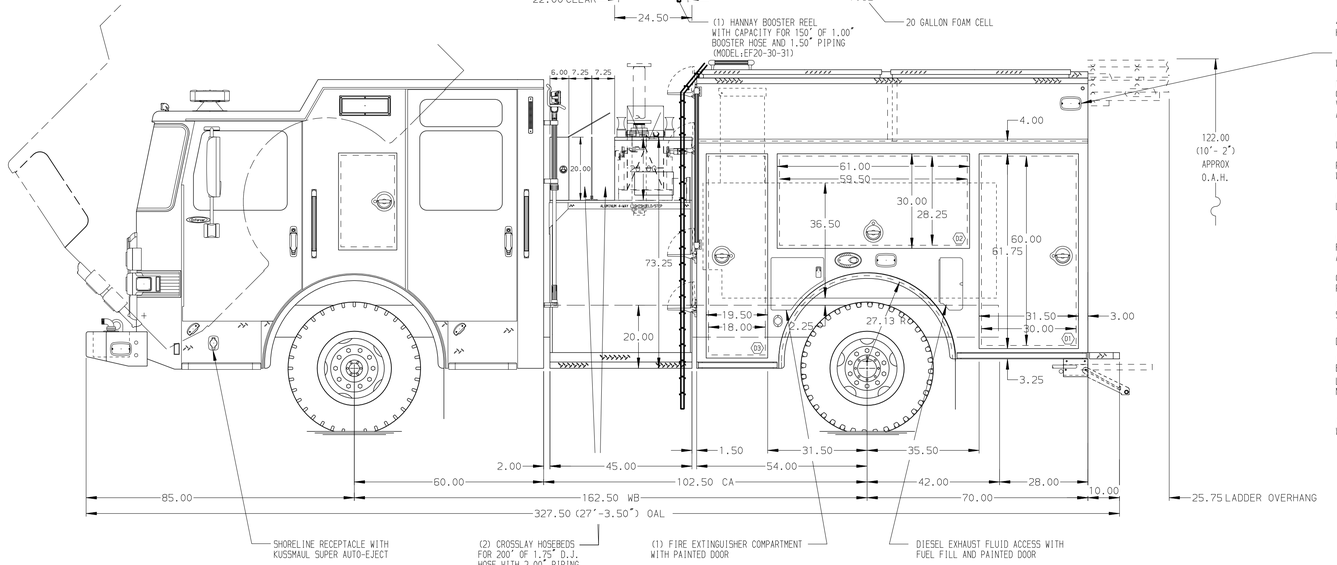

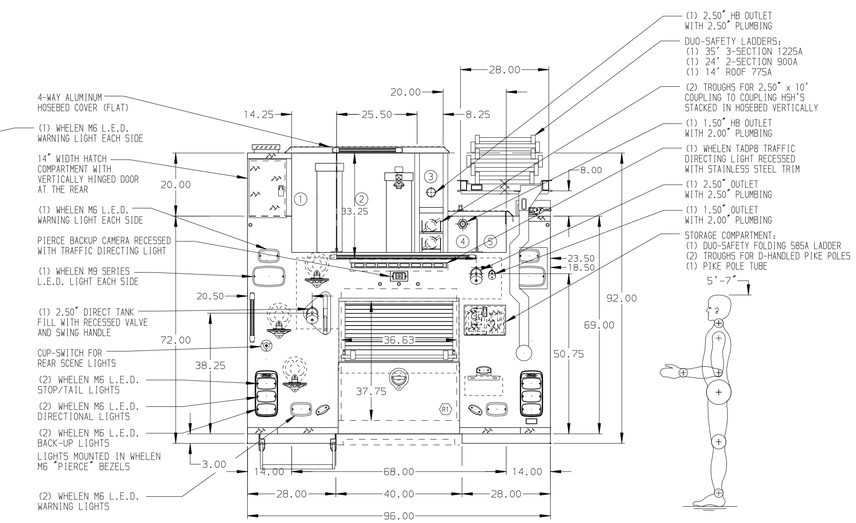

ALUMINUM BODY

SIDE ROLL AND FRONTAL IMPACT PROTECTION

NOTE

DIMENSIONS SHOWN ARE APPROXIMATE AND ARE SUBJECT TO MINOR DEVIATIONS AS MAY OCCUR OR BE NECESSARY IN CONSTRUCTION.
MINOR DETAILS NOT SHOWN.

1. AIR INLET/OUTLET WITH DISCONNECT FITTING LOCATED ON DRIVER'S SIDE PUMP PANEL
2. BATTERY CHARGER LOCATED IN COMPARTMENT D3
3. BATTERY CHARGE INDICATOR LOCATED ON DRIVER'S SEAT RISER
4. PULL STRAP ON DOOR IN COMPARTMENT D2 & P2
5. REVERSED HINGED DOOR ON COMPARTMENT D3
6. KEYED LOCKS FOR LATCHES ON ALL SIDE BODY COMPARTMENT DOORS
7. ONE ADJUSTABLE FULL WIDTH/DEPTH SHELF IN COMPARTMENT P1, P2, R1, TWO IN D1, D3 & P3
8. ONE ADJUSTABLE SLIDE-OUT TRAY IN COMPARTMENT D3
9. ONE FLOOR MOUNTED SLIDE-OUT TRAY IN COMPARTMENT D1 & R1
10. SWING-OUT TOOL BOARD WITH PEGBOARD PATTERN IN COMPARTMENT D2
11. PEGBOARD WITH TRACK ON BACK WALL OF COMPARTMNET D2

REV	DATE	BY	CH
7	06APR18	AMI	WKL
6	05APR18	AMI	CHR
5	09MAR18	AMI	COR
4	12JAN18	AMI	CCA

CHASSIS DATA — MAKE: PIERCE — MODEL: ENFORCER

Pierce MANUFACTURING INC.

TITLE: 1500-D-600P W/20 GAL FOAM, 124" BODY, 3" RAISED REAR (2)XLAYS, BOOSTER REEL, DELUGE, HUSKY, HYD LADR RACK

FOR: UKIAH FIRE DEPARTMENT, UKIAH, CALIFORNIA

DWG NO.: 32041AD

JOB NO.	SCALE	DRAWN BY	CHECKED BY	SHEET SIZE	SHEET NO.
32041 (01-02)	1:24	AMI	CCA	D	1 OF 1
	DATE	08JAN18	08JAN18		

View File Created 13-APR-2018 07:44:56