PUMPER

BODY
Long Aluminum 2nd Gen Pumper

CHASSIS
Saber FR Chassis

CHASSIS

AXLE, FRONT, CUSTOM
18,000 lb Dana Axle

AXLE, REAR
27,000 lb Dana Axle

ENGINE
450 HP Cummins L9 Engine

TRANSMISSION
Allison 5th Gen, 3000 EVS P

BUMPER
19" Extended Stainless Steel

CAB
6000 Saber FR Cab

BODY

WATER TANK
980 Gallon Water Tank

COMPT, PUMPER, REAR
30.75" FF Rollup, 25.88" Flush Rear Compt

COMPT, PUMPER, DRIVER SIDE
161" Rollup Full Height Front & Rear FDLER

COMPT, PUMPER PASS. SIDE
161" Rollup Full Height Front & Rear FDLER

FIRE SUPPRESSION

PUMPHOUSE
45" Control Zone Side Mount

PUMP
1500 GPM Waterous CSU

CROSSLAYS, 1.50"
(2) 1.50" Standard Capacity

CROSSLAYS, 2.50"
2.50" Crosslay Not Required

SPEEDLAYS
Speedlays Not Required

GENERATOR
Harrison 6kW Hydraulic Generator

Foam System
Husky 3 Single Agent Foam System

Foam Cell
20 Gallon Foam Cell, Reduced Water

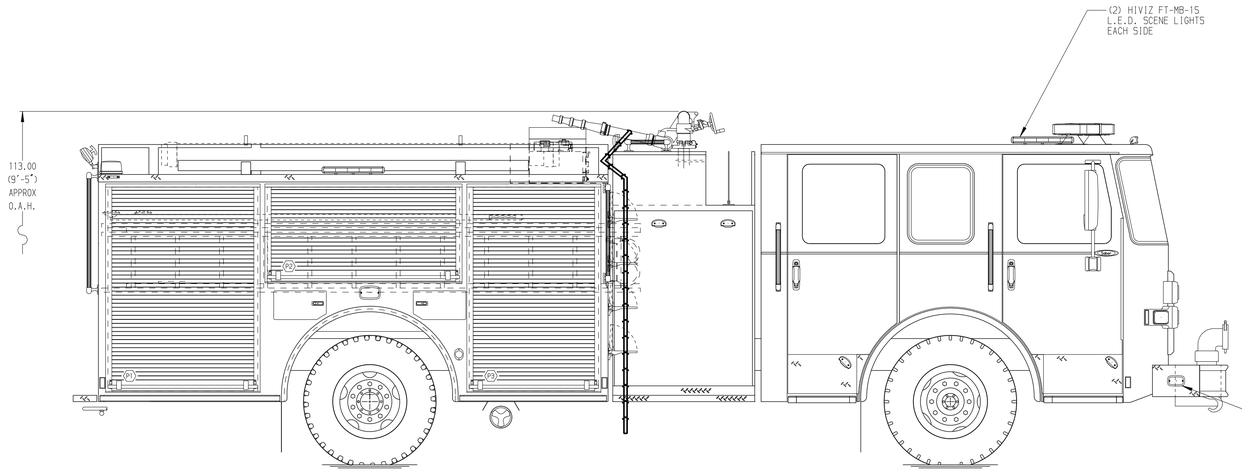

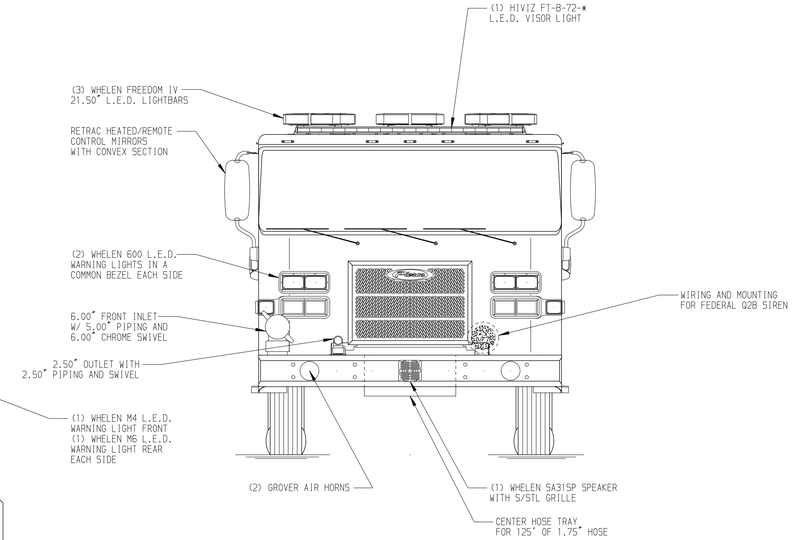

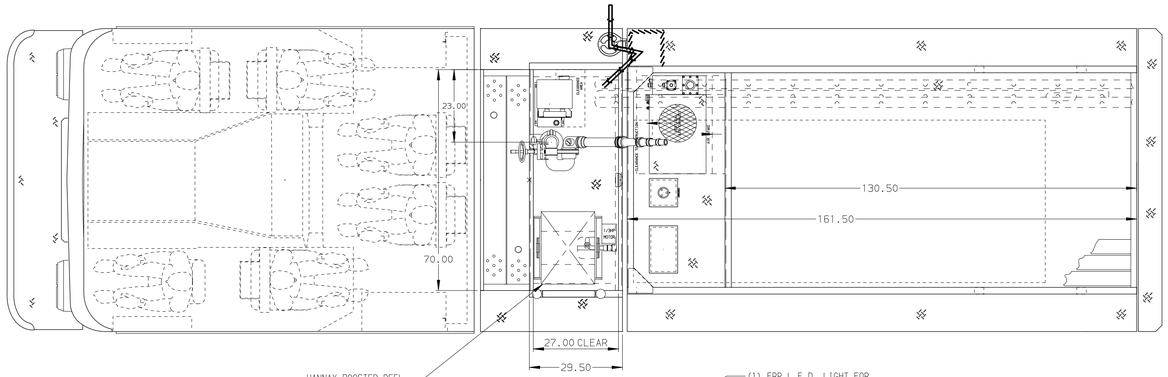

HOSEBED CAPACITY

BED 1
500' OF 3.00" D.J. POLY HOSE

BED 2
1000' OF 5.00" D.J. POLY HOSE

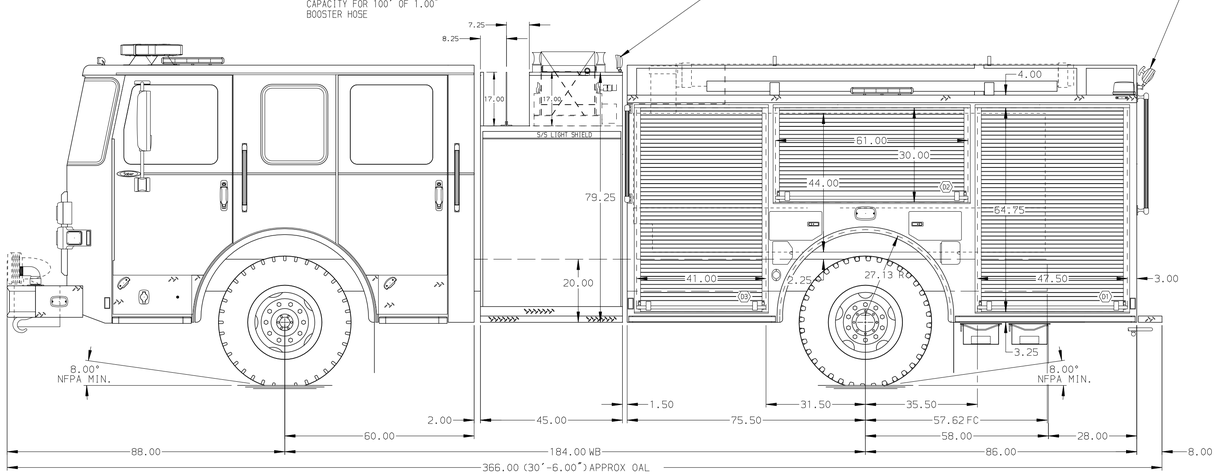

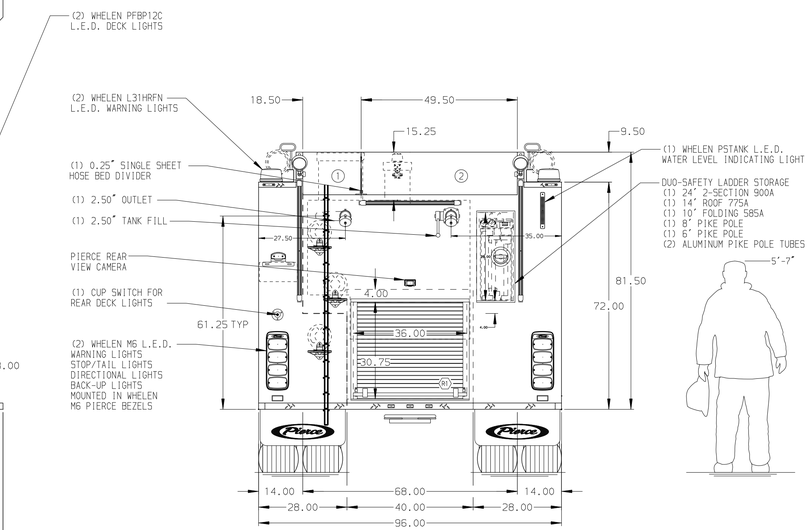

MAXIMUM O.A.H. - 113.00"

NOTE
DIMENSIONS SHOWN ARE APPROXIMATE AND ARE SUBJECT TO MINOR DEVIATIONS AS MAY OCCUR OR BE NECESSARY IN CONSTRUCTION.
MINOR DETAILS NOT SHOWN.

REV	DATE	BY	CH
2	21FEB18	JAF	RWI
1	30JAN18	JAF	RWI

CHASSIS DATA
MAKE: PIERCE
MODEL: SABER FR

Pierce MANUFACTURING INC.

TITLE	Pierce Pumper Approval Drawing -	JOB NO.	32044
		SCALE	1:24
FOR	Mattoax Volunteer Fire Department -	DRAWN BY	COL
		CHECKED BY	KBO
DWG NO.	32044AD	SHEET SIZE	D
		SHEET NO.	1 OF 1
		DATE	260CT17
			270CT17

View File Created 22-FEB-2018 08:00:47