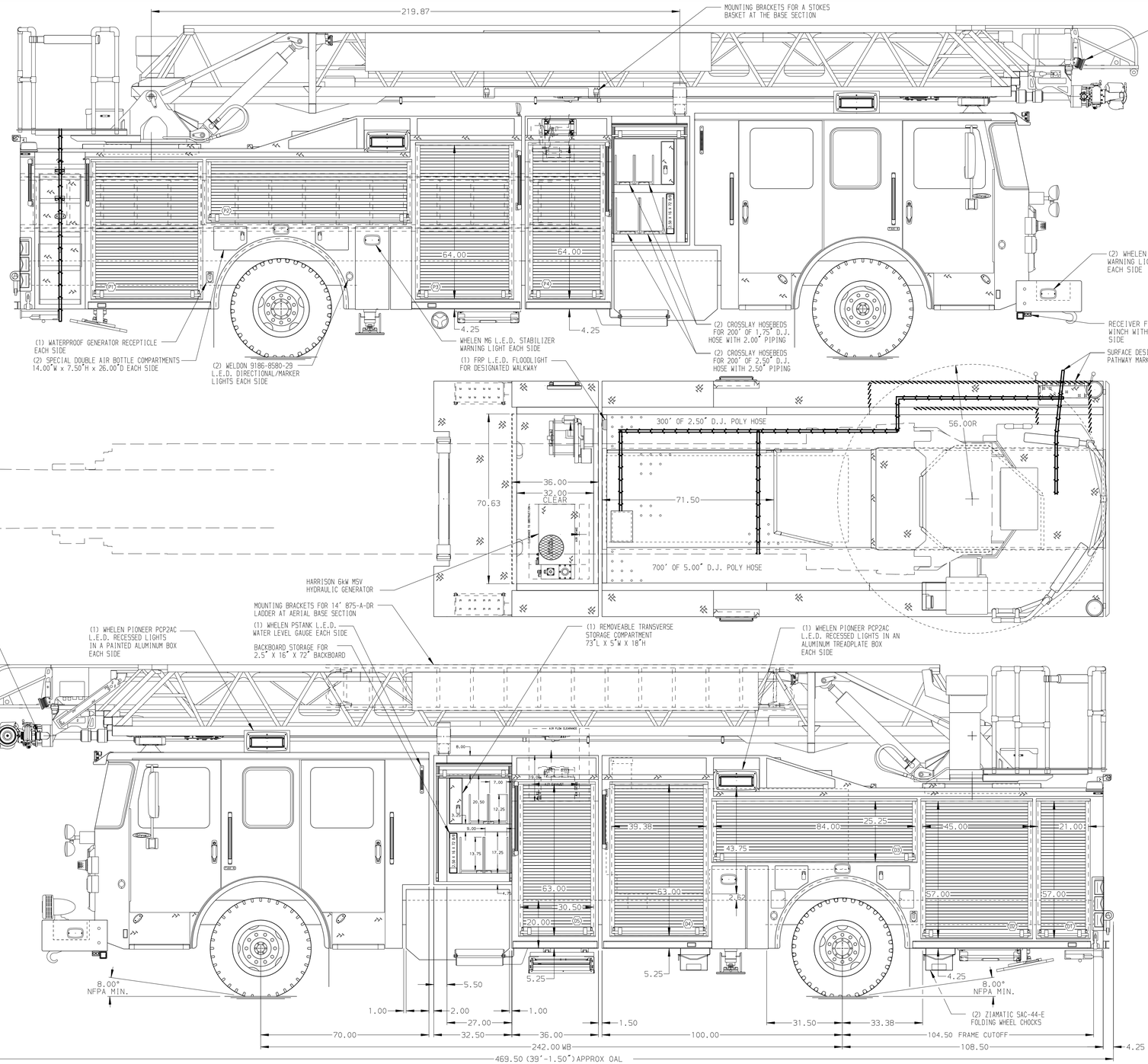

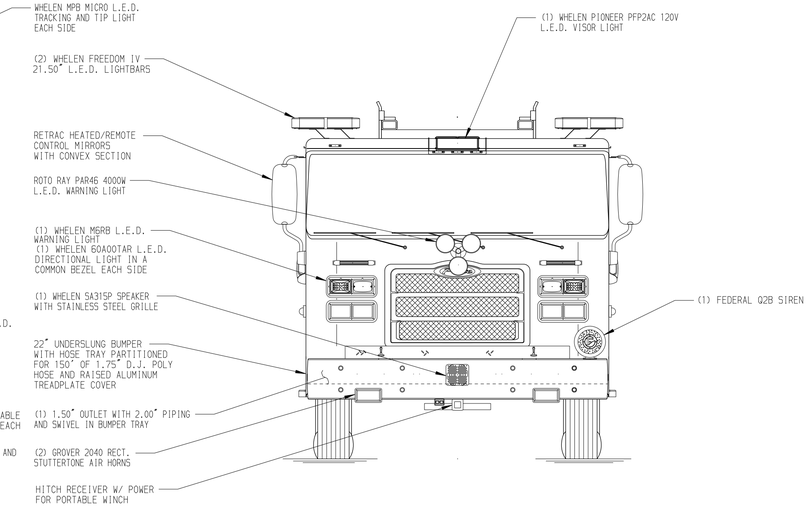

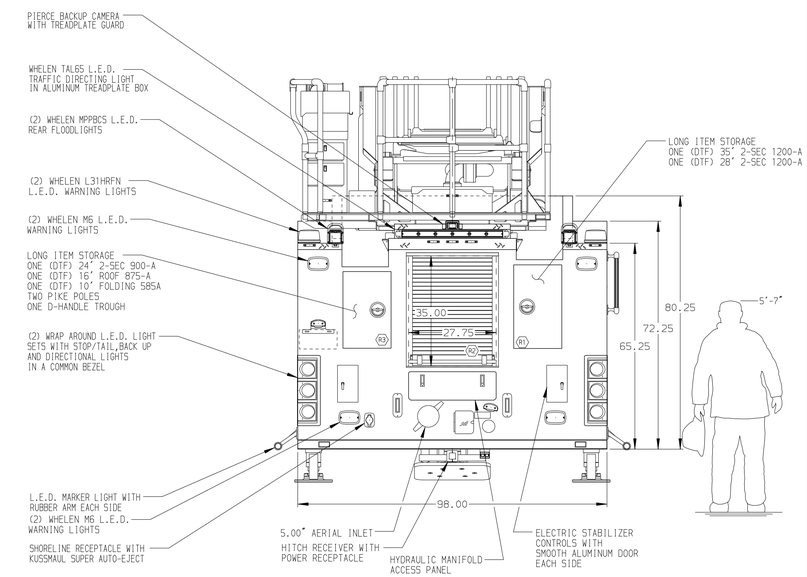

ALUMINUM BODY | MAXIMUM O.A.L. 474" | MAXIMUM O.A.H. 141.50"

SIDE ROLL AND FRONTAL IMPACT PROTECTION

NOTE

DIMENSIONS SHOWN ARE APPROXIMATE AND ARE SUBJECT TO MINOR DEVIATIONS AS MAY OCCUR OR BE NECESSARY IN CONSTRUCTION.
MINOR DETAILS NOT SHOWN.

1. AIR INLET WITH DISCONNECT COUPLING INSIDE CAB DOOR ON SEAT RISER
2. ONE ALUMINUM HOSE TRAY PARTITION SHIPPED LOOSE
3. BATTERY CHARGER/COMPRESSOR IN COMPARTMENT D4
4. BATTERY CHARGE INDICATOR LOCATED ON DRIVER'S SEAT RISER
5. ONE ADJUSTABLE FULL WIDTH/FULL DEPTH SHELF IN COMPARTMENT D2,P3,P4 AND TWO IN D4
6. 1500 GPM HIGH FLOW WATERWAY
7. ONE FLOOR MOUNTED SLIDE-OUT TRAY IN COMPARTMENT P1
8. ALUMINUM PEGBOARD WITH TRACKS ON THE REAR WALL OF COMPARTMENT D3,P2
9. CIRCUIT BREAKER PANEL IN COMPARTMENT D4
10. ONE DUPLEX RECEPTACLE IN EACH EMS COMPARTMENT AND REAR OF ENGINE TUNNEL
11. TRIDENT FOLDING STEPS ON AERIAL DEVICE
12. 2-WAY INTERCOM SYSTEM BETWEEN AERIAL TIP AND TURNTABLE
13. LIFTING EYE ROPE RESCUE ATTACHMENT AT AERIAL TIP

REV	DATE	BY	CH
4	02MAY18	MWA	PJP
3	21MAR18	MWA	PJP
2	18JAN18	SVA	CRI

CHASSIS DATA
MAKE: PIERCE
MODEL: ENFORCER

Pierce MANUFACTURING INC.

TITLE: 107' ASCENDANT ASL AERIAL LADDER AND BODY ASSEMBLY 500 GALLON TANK
FOR: FAIRMOUNT FIRE PROTECTION DISTRICT GOLDEN, COLORADO
DWG NO.: 32051AD

JOB NO.	32051
SCALE	1:24
DATE	
DRAWN BY	MWA 05JAN18
CHECKED BY	GRM 09JAN18
SHEET SIZE	D
SHEET NO.	1 OF 1

View File Created 02-MAY-2018 11:00:04