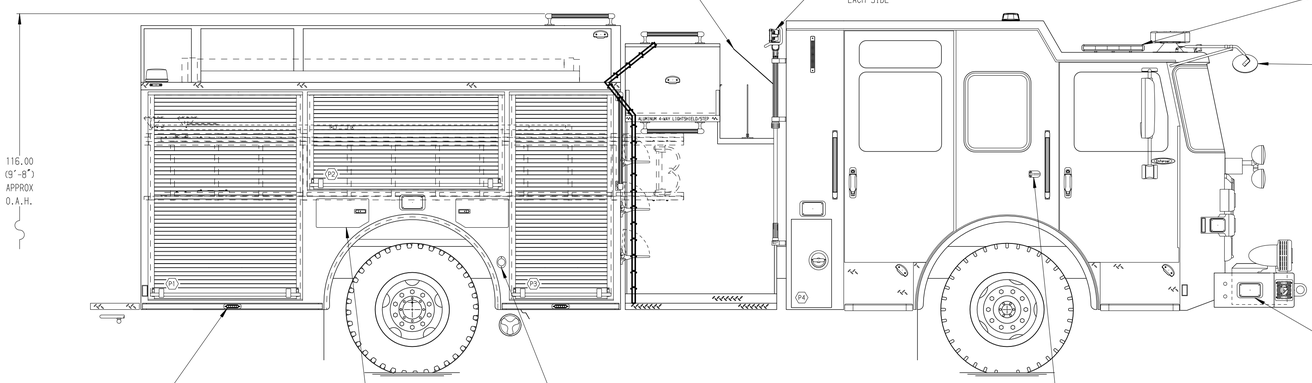


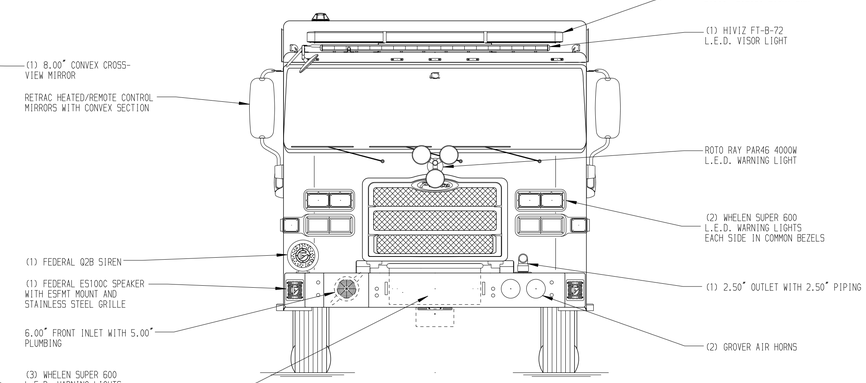


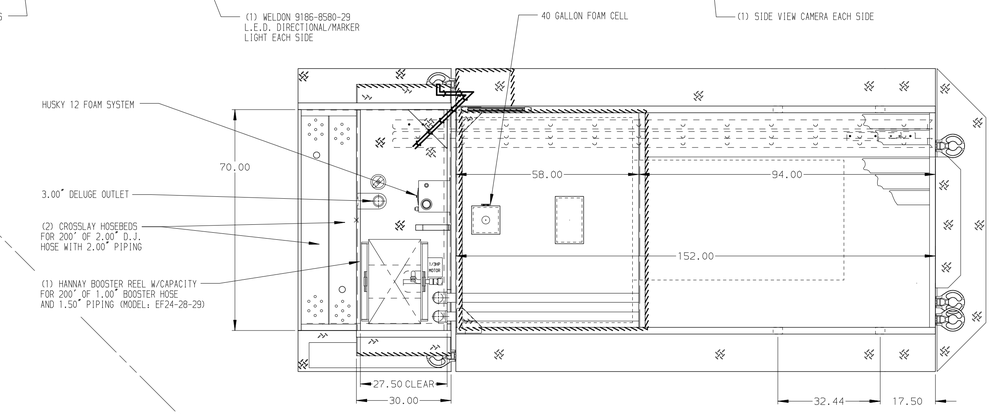


HOSEBED CAPACITIES

1. 200' OF 2.50" D.J. HOSE
2. 400' OF 1.75" D.J. HOSE
3. 800' OF 5.00" D.J. HOSE
4. 800' OF 3.00" D.J. HOSE
5. EMPTY HOSE BED

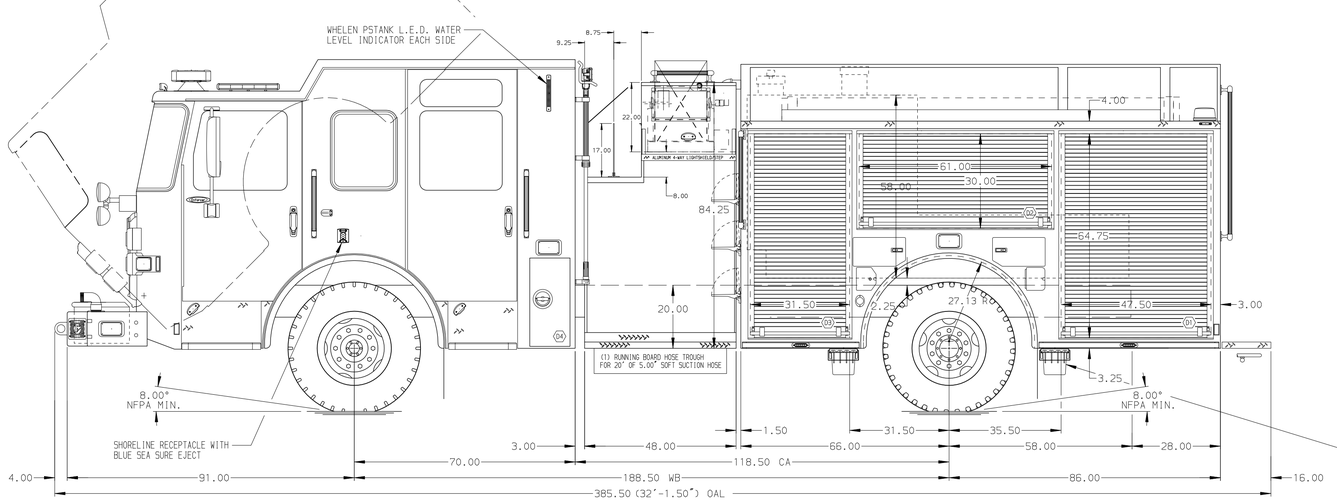


(2) WORDEN HWGY-SB SUPER GRIPPER WHEEL CHOCKS

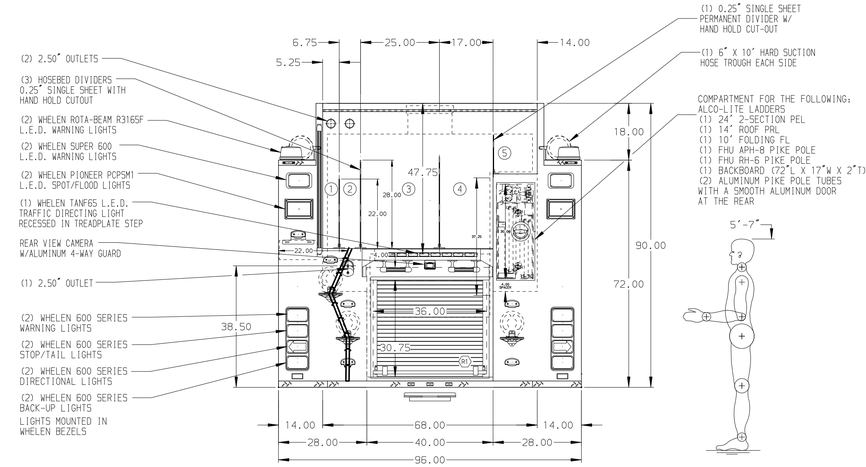


ALUMINUM BODY

SIDE ROLL AND FRONTAL IMPACT PROTECTION

NOTE

DIMENSIONS SHOWN ARE APPROXIMATE AND ARE SUBJECT TO MINOR DEVIATIONS AS MAY OCCUR OR BE NECESSARY IN CONSTRUCTION.
MINOR DETAILS NOT SHOWN.

1. BATTERY CHARGER LOCATED BEHIND DRIVER'S SEAT
2. BATTERY CHARGE INDICATOR LOCATED ON DRIVER'S SEAT RISER
3. DRIP PAN GUARD FOR ROLL-UP DOOR LOCATED IN COMPARTMENTS D1,D2,D3,P1,P2,P3,R1
4. TWO FULL WIDTH/DEPTH ADJUSTABLE SHELVES LOCATED IN COMPARTMENTS D1,D3,P1,P3
5. SWING-OUT TOOL BOARD WITH PEGBOARD PATTERN IN COMPARTMENT D2
6. PAC TRAC ON THE REAR WALL OF COMPARTMENTS D1,D2,D3
7. PARTITION BETWEEN COMPARTMENTS D1/R1 AND P1/R1
8. ZIAMATIC SCBA HOLDER BRACKET LOCATED D1
9. AIR INLET WITH DISCONNECT COUPLING ON D.S. PUMP PANEL

| REV | DATE | BY | CH |
|---|---|---|---|
| 7 | 10MAY18 | JWO | JGO |
| 6 | 08MAY18 | JWO | JGO |
| 5 | 20APR18 | JWO | JGO |
| 4 | 23JAN18 | CDU | CCA |

| | |
|---|---|
| CHASSIS DATA | |
| MAKE | PIERCE |
| MODEL | ENFORCER |
| DWG NO. | 32067AD |

Pierce MANUFACTURING INC.

| | |
|---|---|
| TITLE | 1500-D-710P W/40G FOAM,152",FULL HEIGHT,FDLER (2) X-LAYS,DELUGE,BOOSTER REEL |
| FOR | CITY OF NEWPORT NEWS NEWPORT NEWS, VIRGINIA |

| | |
|---|---|
| JOB NO. | 32067 01-02 |
| SCALE | 1:24 |
| DATE | |
| DRAWN BY | JWO |
| 08JAN18 | |
| CHECKED BY | CDU |
| 15JAN18 | |
| SHEET SIZE | D |
| SHEET NO. | 1 OF 1 |

View File Created 10-MAY-2018 08:28:05