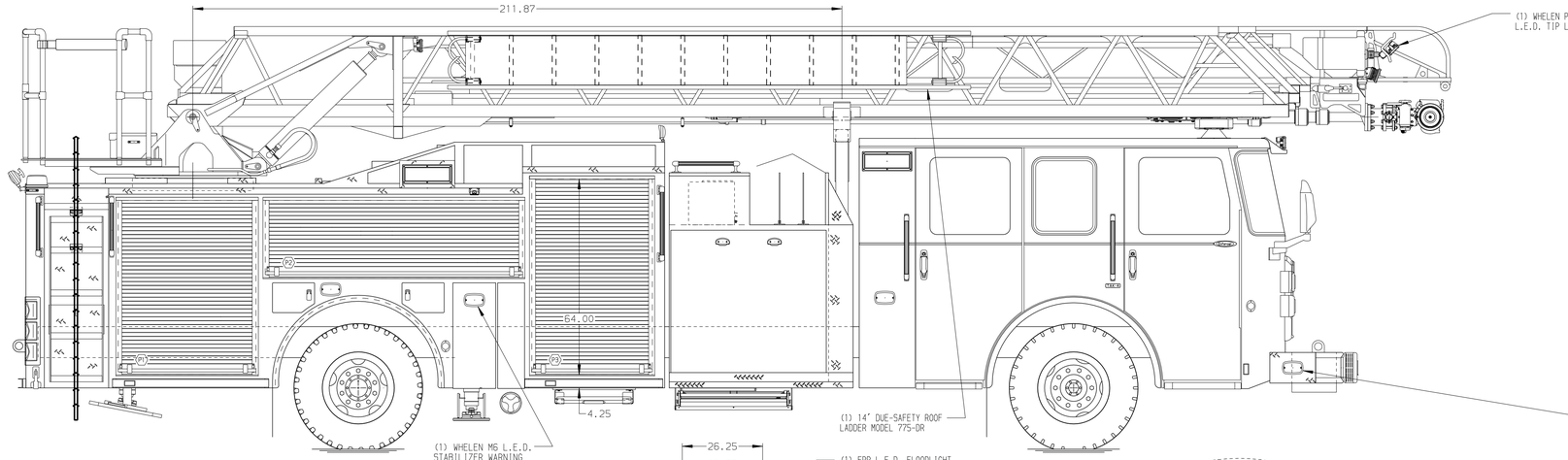

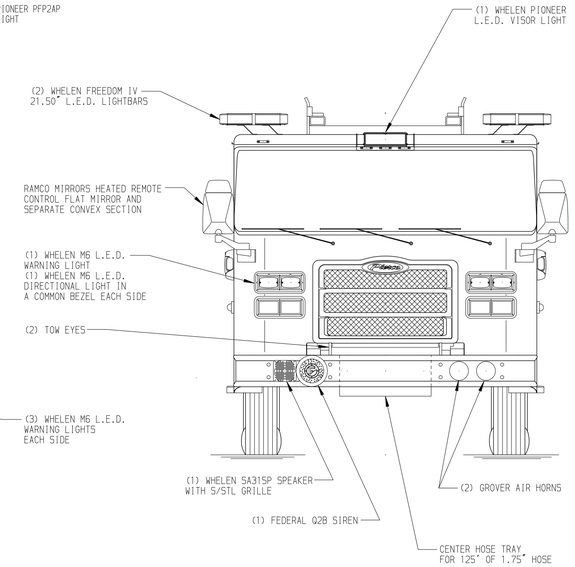

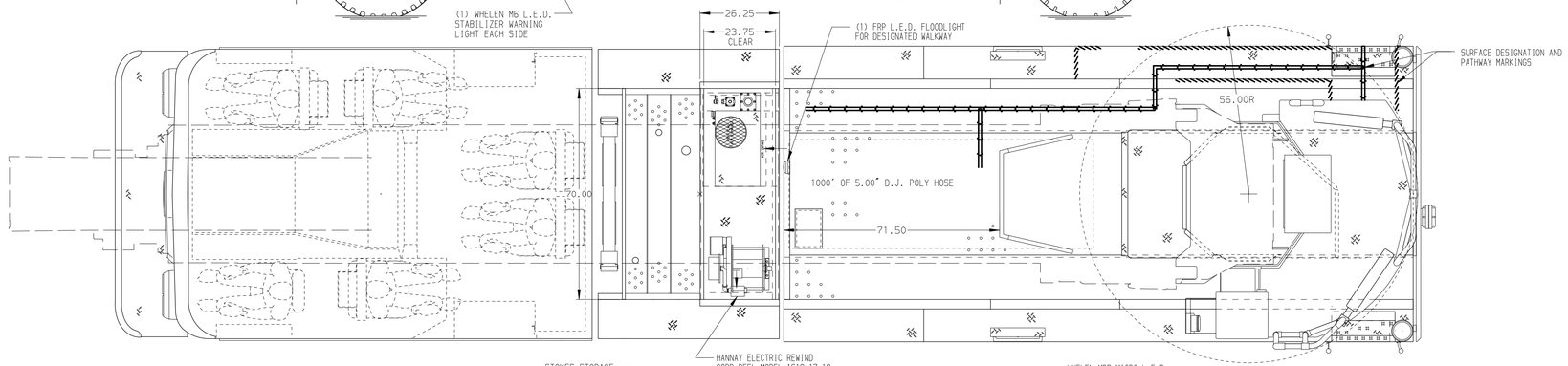

BODY	WATER TANK
107' ASL Aluminum Body	500 Gallon Poly Water Tank
COMPT,DRIVER SIDE FRONT	Foam System
Full Height Rollup Forward	Foam System Not Required
COMPT,DRIVER SIDE REAR	Foam Cell
Full Height Rollup Rearward	Foam Cell Not Required
COMPT,PASSENGER SIDE FRONT	
Full Height Rollup Forward	
COMPT,PASSENGER SIDE REAR	
Full Height Rollup Rearward	

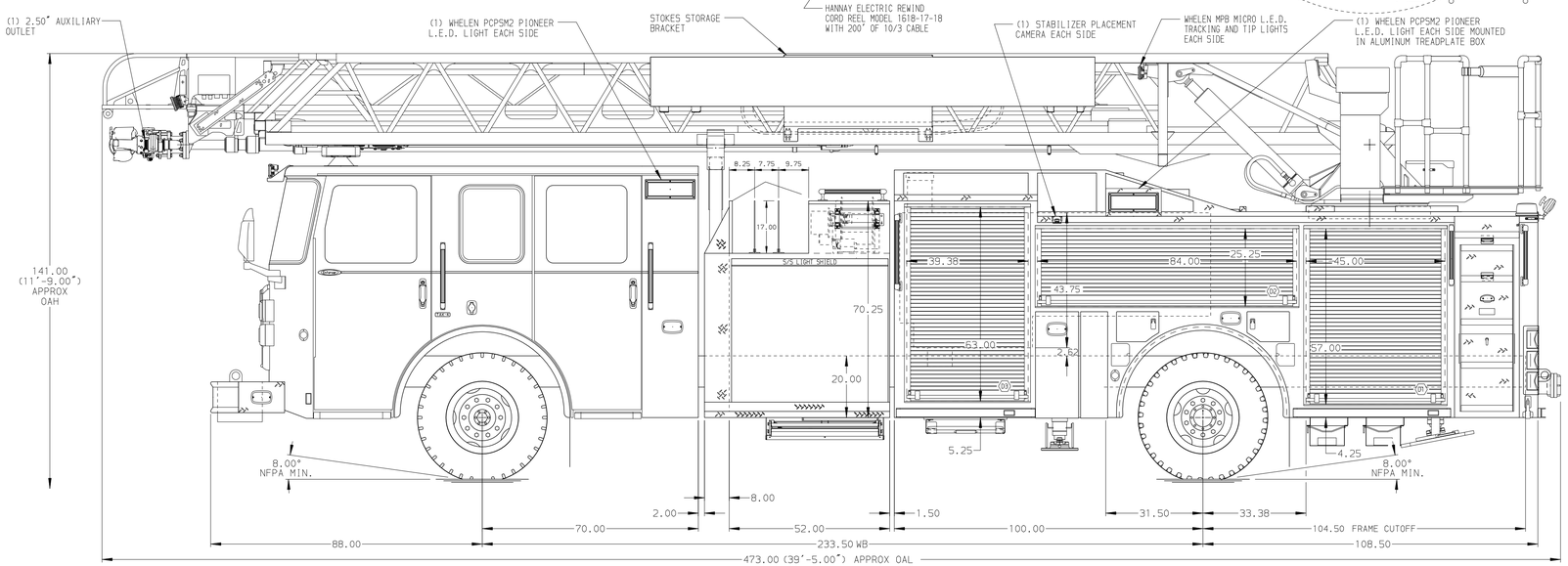

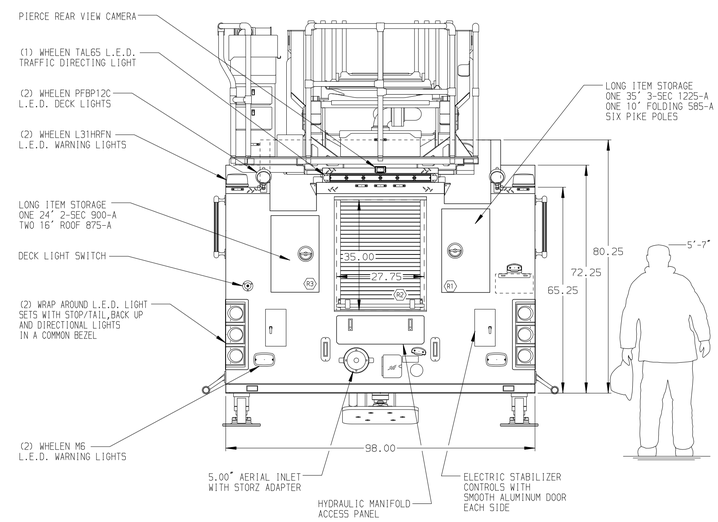

CHASSIS	CAB	AXLE,FRONT,CUSTOM	TRANSMISSION	PUMPHOUSE	CROSSLAYS,1.50"	SPEEDLAYS
Enforcer Chassis	7000 Enforcer Cab	22,800 Lb TAK-4 Axle	Allison 5th Gen, 3000 EVS P	52" Control Zone Side Mount	(2) 1.50" Standard Capacity	Speedlays Not Required
ENGINE	BUMPER	AXLE,REAR		PUMP	CROSSLAYS,2.50"	GENERATOR
450 HP Cummins L9 Engine	19" Extended Stainless Steel	33,500 Lb Meritor Axle		2000 GPM Waterous CSU	(1) 2.50" Standard Capacity	Harrison 6kW MSV Hydraulic

NOTE

DIMENSIONS SHOWN ARE APPROXIMATE AND ARE SUBJECT TO MINOR DEVIATIONS AS MAY OCCUR OR BE NECESSARY IN CONSTRUCTION.
MINOR DETAILS NOT SHOWN.

1. ONE 1.50 OUTLET WITH 2.00 PIPING AND SWIVEL LOCATED IN CENTER BUMPER TRAY
2. SHORELINE RECEPTACLE WITH KUSSMAUL SUPER AUTO-EJECT LOCATED ON DRIVER SIDE OF THE CAB
3. AIR INLET WITH DISCONNECT COUPLING LOCATED ON DRIVER SIDE PUMP PANEL
4. BATTERY CHARGER LOCATED IN COMPARTMENT D3
5. BATTERY CHARGE INDICATOR LOCATED ON THE DRIVER SIDE SEAT RISER
6. FOUR ADJUSTABLE SHELVES IN COMPARTMENTS PER SHOP ORDER
7. FOUR ADJUSTABLE TILTING SLIDE-OUT TRAYS IN COMPARTMENTS PER SHOP ORDER
8. FOUR FLOOR MOUNTED SLIDE-OUT TRAYS IN COMPARTMENTS PER SHOP ORDER
9. ONE SWING-OUT ALUMINUM TOOL BOARD IN COMPARTMENT PER SHOP ORDER
10. CIRCUIT BREAKER PANEL LOCATED IN COMPARTMENT PER SHOP ORDER
11. 120V POWER TO AERIAL TIP
12. NON-RAISED AERIAL PEDESTAL
13. 1500 GPM HIGH FLOW WATERWAY

REV	DATE	BY	CH
1	08JAN18	TKA	KBO
0	30NOV17	TKA	JEC

CHASSIS DATA
MAKE: PIERCE
MODEL: ENFORCER

Pierce MANUFACTURING INC.

TITLE: 107' ASCENDANT AERIAL LADDER AND BODY ASSEMBLY
-
FOR: HARLAN FIRE DEPARTMENT
HARLAN, KENTUCKY
DWG NO.: 32093AD

JOB NO.	32093
SCALE	1:24
DATE	
DRAWN BY	TKA 07NOV17
CHECKED BY	GRM 09NOV17
SHEET SIZE	D
SHEET NO.	1 OF 1

View File Created 16-JAN-2018 07:33:08