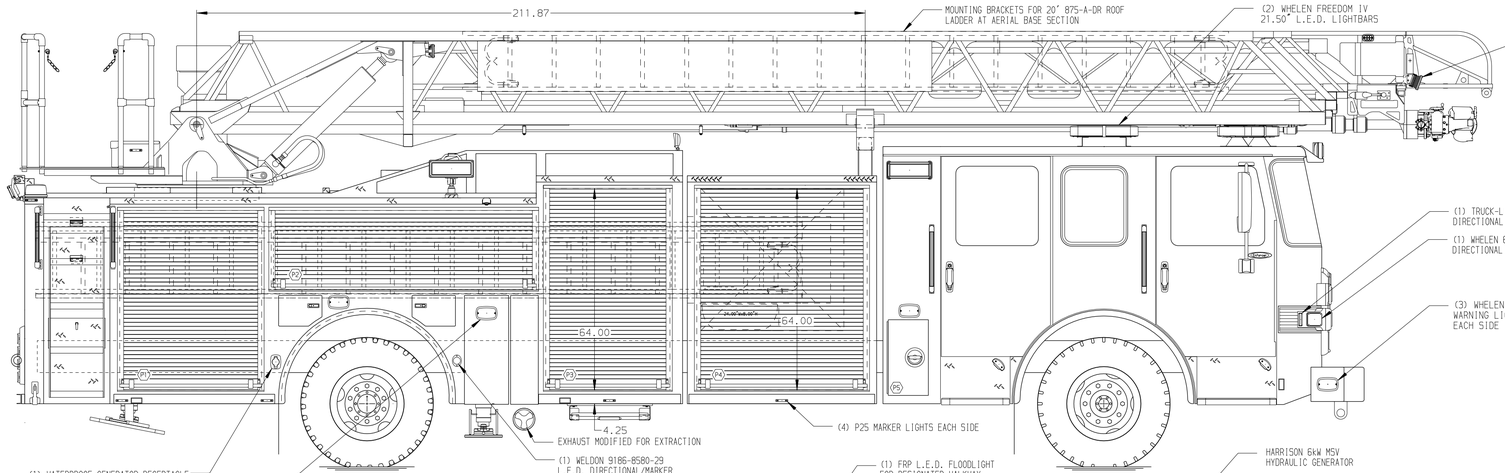

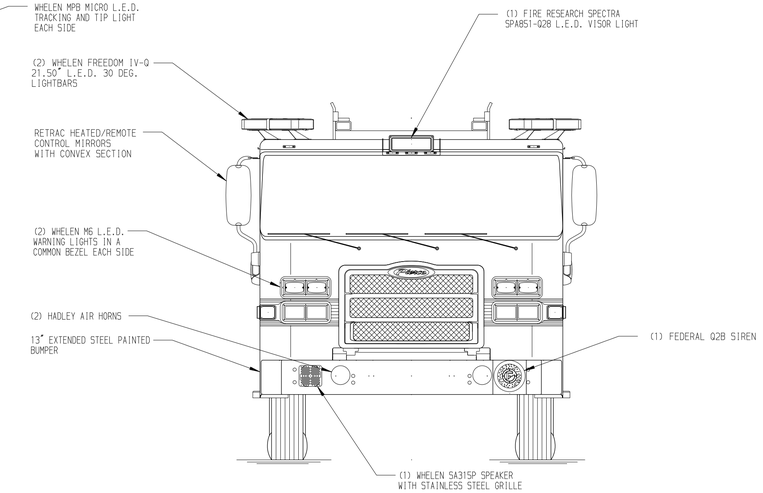

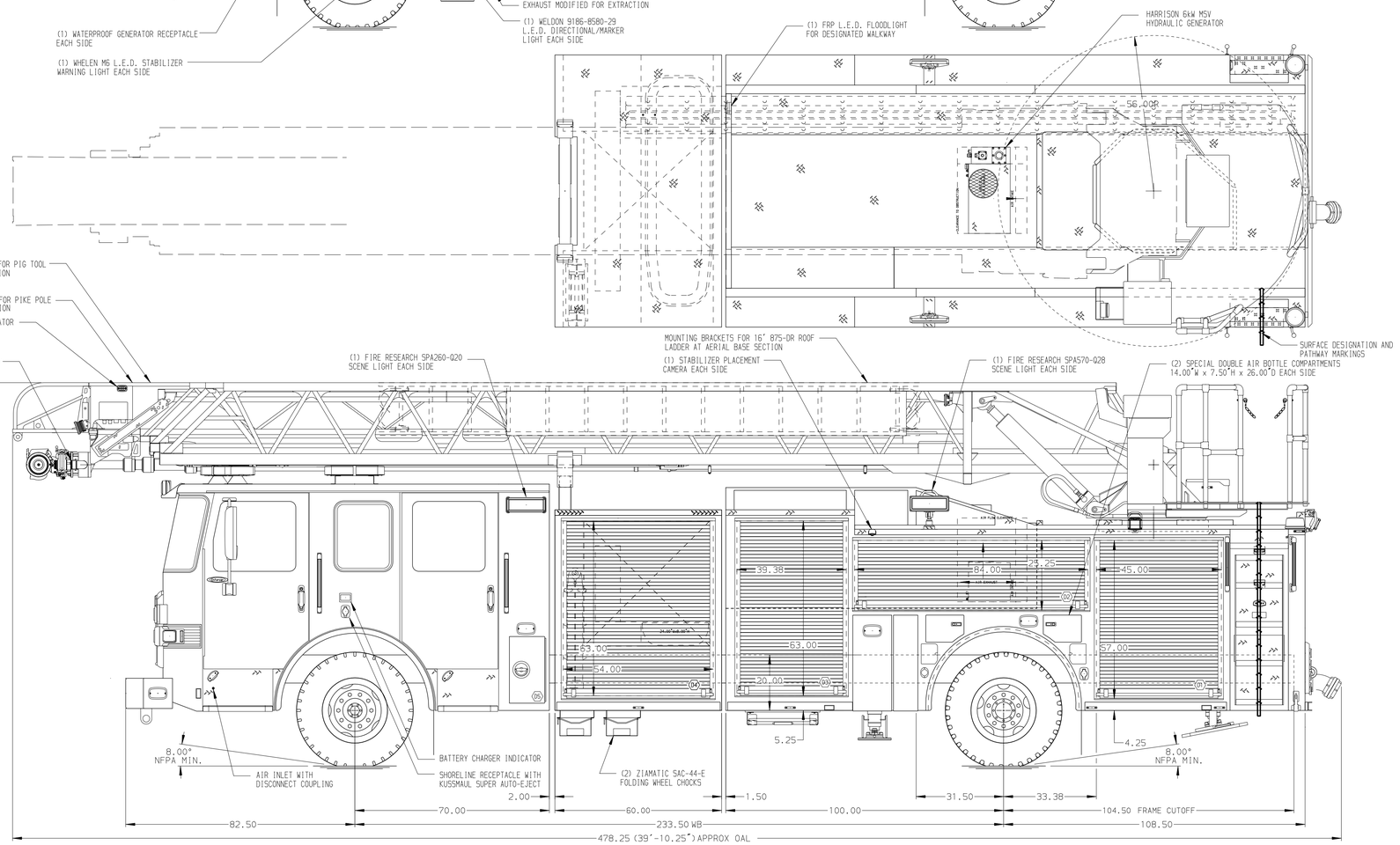

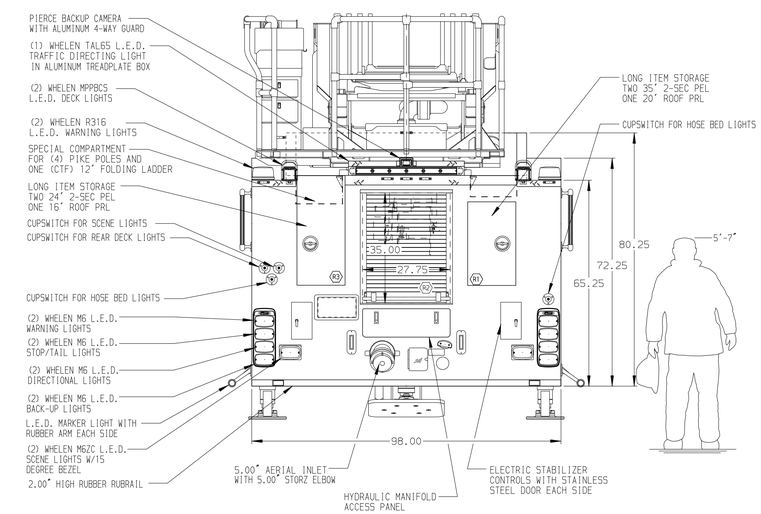

ALUMINUM BODY

NOTE

DIMENSIONS SHOWN ARE APPROXIMATE AND ARE SUBJECT TO MINOR DEVIATIONS AS MAY OCCUR OR BE NECESSARY IN CONSTRUCTION.
MINOR DETAILS NOT SHOWN.

1. ALUMINUM 4-WAY ON CAB ROOF
2. AIR COMPRESSOR LOCATED BEHIND OFFICER'S SEAT
3. BATTERY CHARGER LOCATED IN COMPARTMENT D3
4. SUB-FEED CIRCUIT BREAKER PANEL IN COMPARTMENT D3
5. ONE ADJUSTABLE FULL WIDTH/FULL DEPTH SHELF IN COMPARTMENT D1,D2,D3,P1,P2, AND TWO IN P3
6. ONE 7 PLACE RECEPTACLE STRIP BEHIND DRIVER'S SEAT
7. ONE FLOOR EXTENSION WITH 1.00" DOWNTURNED LIP IN COMPARTMENT D4,P4
8. ONE ADJUSTABLE TOOL BOARD MOUNTED TO SLIDE-OUT TRAY IN COMPARTMENT D4
9. ONE FLOOR MOUNTED SLIDE-OUT TRAY WITH 2" SIDES IN COMPARTMENT D1,D3,P3
10. ONE ADJUSTABLE HEIGHT UTILITY SLIDE OUT TRAY IN COMPARTMENT D4
11. TWO VERTICAL PARTITIONS (SPECIAL HEIGHT) IN COMPARTMENT D4
12. ONE VERTICAL PEGBOARD PARTITION IN COMPARTMENT D2,P2
13. ALUMINUM PEGBOARD WITH TRACKS ON THE REAR WALL OF COMPARTMENT D1,D3,P1,P2,P3,P4
14. CIRCUIT BREAKER PANEL IN COMPARTMENT D3
15. ONE SEVEN PLACE RECEPTACLE STRIP IN COMPARTMENT D1,D3
16. ONE HANNAY ELECTRIC REWIND CORD REEL MODEL 1618-17-18 FOR 200' OF 10/3 CABLE ON INVERTED TRAY LOCATED IN COMPARTMENT R2
17. TRIDENT FOLDING STEPS ON AERIAL DEVICE
18. REMOTE LADDER CONTROLS AT AERIAL TIP
19. L.E.D. LIGHTING ON AERIAL LADDER SECTIONS
20. 2-WAY INTERCOM SYSTEM BETWEEN AERIAL TIP AND TURNTABLE
21. LIFTING EYE ROPE RESCUE ATTACHMENT AT AERIAL TIP
22. 1500 GPM HIGH FLOW WATERWAY
23. STORAGE RACK FOR (8) AIR BOTTLES LOCATED IN COMPARTMENT P1
24. ONE ADJUSTABLE SHELF WITH 1.25" LIP IN FORWARD FACING EMS COMPARTMENT
25. ONE LITTLE GIANT VELOCITY 13 IN COMPARTMENT D4
26. MOUNTING FOR STOKES BASKET IN COMPARTMENT D4/P4

REV	DATE	BY	CH
3	03APR18	MWA	CSH
2	14MAR18	MWA	CSH
1	26JAN18	MWA	CRI

CHASSIS DATA	
MAKE	PIERCE
MODEL	ENFORCER
DWG NO.	32155AD

Pierce MANUFACTURING INC.

TITLE	107' ASCENDANT HSL AERIAL LADDER AND BODY ASSEMBLY NO PUMP/NO TANK
FOR	BOROUGH OF ROSELAND ROSELAND, NEW JERSEY

JOB NO.	32155
SCALE	1:24
DATE	
DRAWN BY	MWA 12JAN18
CHECKED BY	CRI 22JAN18
SHEET SIZE	D
SHEET NO.	1 OF 1

View File Created 03-APR-2018 13:59:23