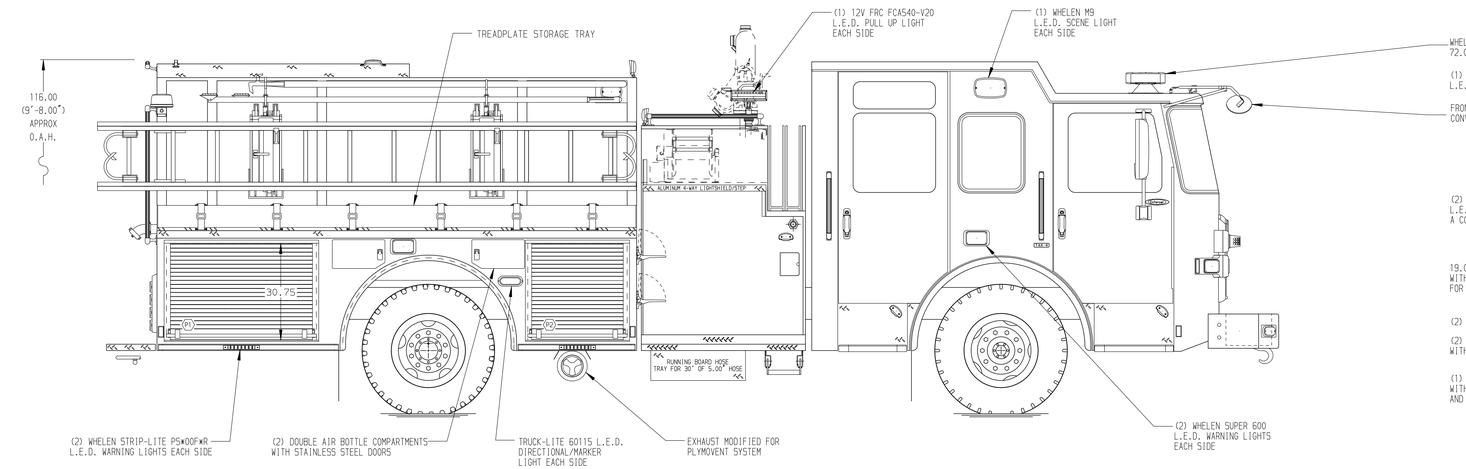

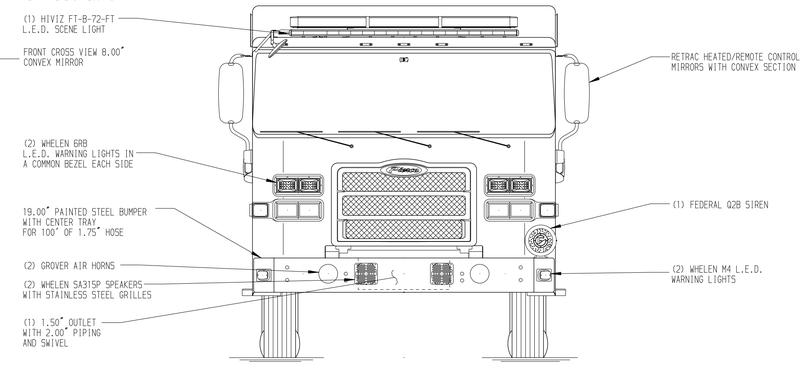

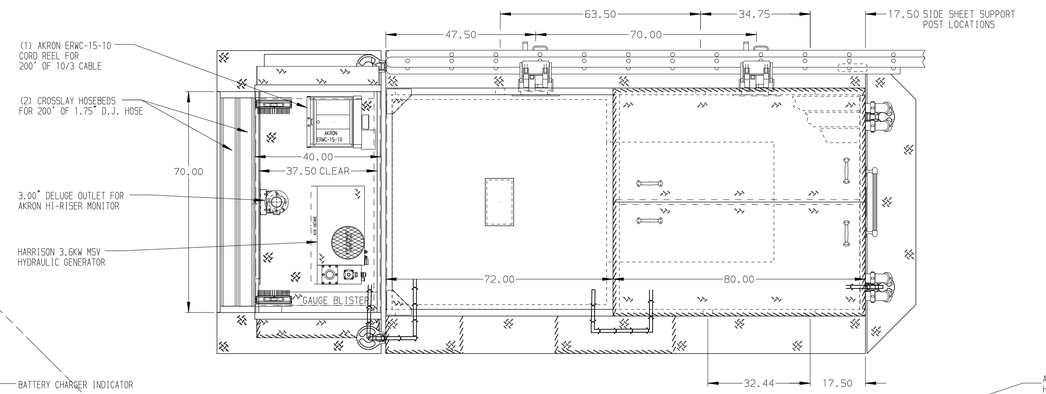

HOSEBED CAPACITIES

1. - 400' OF 2.50" D.J. HOSE
2. - 200' OF 2.50" D.J. HOSE
3. - 200' OF 2.50" D.J. HOSE
4. - 300' OF 1.75" D.J. HOSE
5. -1200' OF 5.00" D.J. HOSE

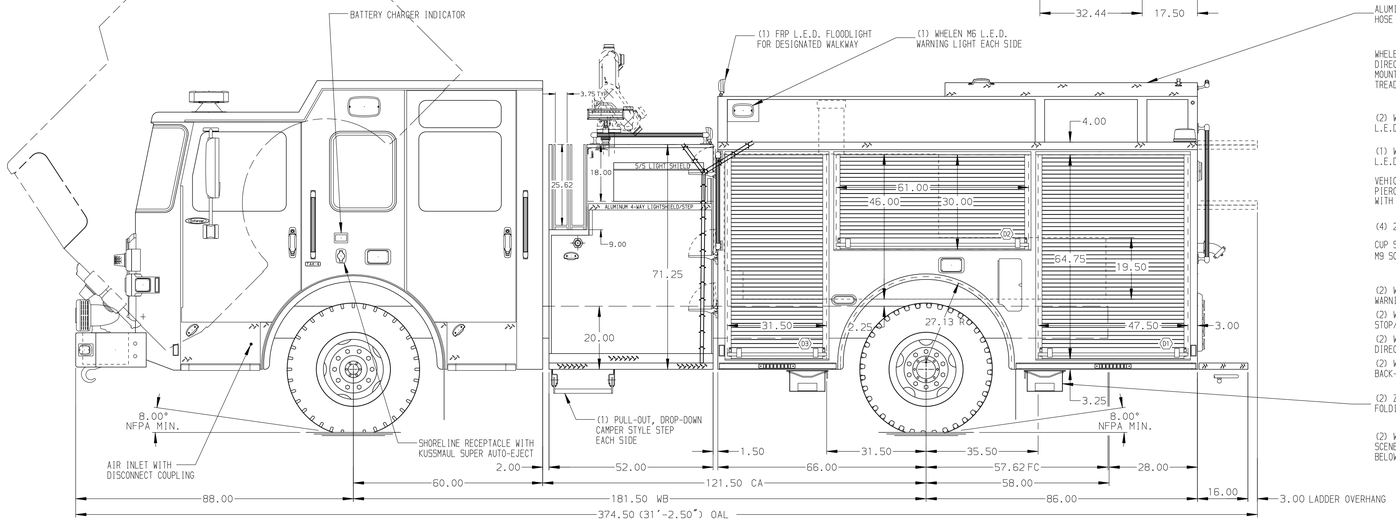

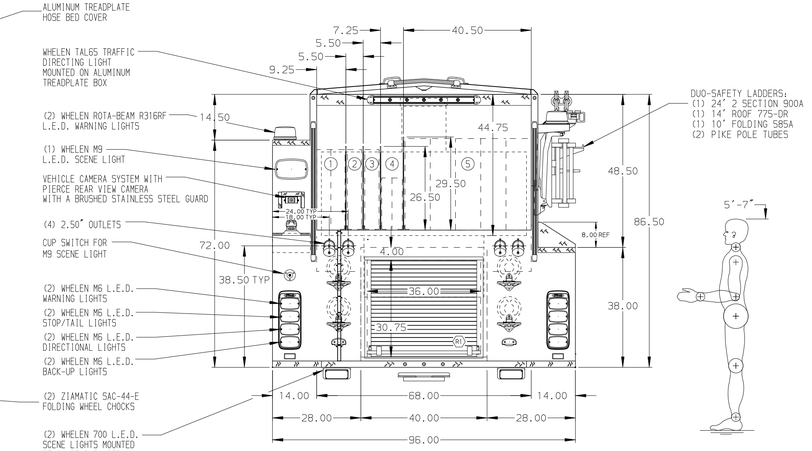

ALUMINUM BODY

MAXIMUM O.A.H. 116.00"

SIDE ROLL PROTECTION

NOTE

DIMENSIONS SHOWN ARE APPROXIMATE AND ARE SUBJECT TO MINOR DEVIATIONS AS MAY OCCUR OR BE NECESSARY IN CONSTRUCTION.
MINOR DETAILS NOT SHOWN.

1. INSTA-CHAIN AUTOMATIC TIRE CHAINS TO BE PROVIDED AT REAR
2. ROSCO WINDSHIELD MOUNTED CAMERA SYSTEM WITH DVR
3. BATTERY CHARGER LOCATED BEHIND DRIVER'S SEAT
4. DRIP PAN GUARD FOR ROLL-UP DOOR LOCATED D1,D2,D3,P1,P2,R1
5. ONE FULL WIDTH/DEPTH ADJUSTABLE SHELF LOCATED IN COMPARTMENTS D3,P1,R1, TWO IN D1,P2
6. ONE FLOOR MOUNTED SLIDE-OUT TRAY IN COMPARTMENT P1
7. ONE SWING-OUT ALUMINUM TOOL BOARD IN COMPARTMENT P2
8. PARTITION BETWEEN COMPARTMENTS D1/R1 AND P1/R1
9. ONE ALUMINUM MOUNTING PLATE IN COMPARTMENT D3
10. CIRCUIT BREAKER PANEL IN COMPARTMENT D3

REV	DATE	BY	CH
V	22FEB18	JWO	CDU

CUSTOMER APPROVAL

APPROVED BY:

DATE:

Pierce MANUFACTURING INC.

CHASSIS DATA	TITLE	1500-D-750G, 152" FDLER - FH DS / LOW PS, SIDE CTRL (2) X-LAYS, DELUGE, CABLE REEL, GENERATOR, ZICO RACK	JOB NO. PRELIM
MAKE PIERCE	FOR	CONCORD FIRE DEPARTMENT CONCORD, NORTH CAROLINA	SCALE 1:24 / DATE
MODEL ENFORCER	DWG NO.	32173AD	DRAWN BY JWO 12FEB18
			CHECKED BY CDU 14FEB18
			SHEET SIZE D / SHEET NO. 1 OF 1

View File Created 22-FEB-2018 14:54:39