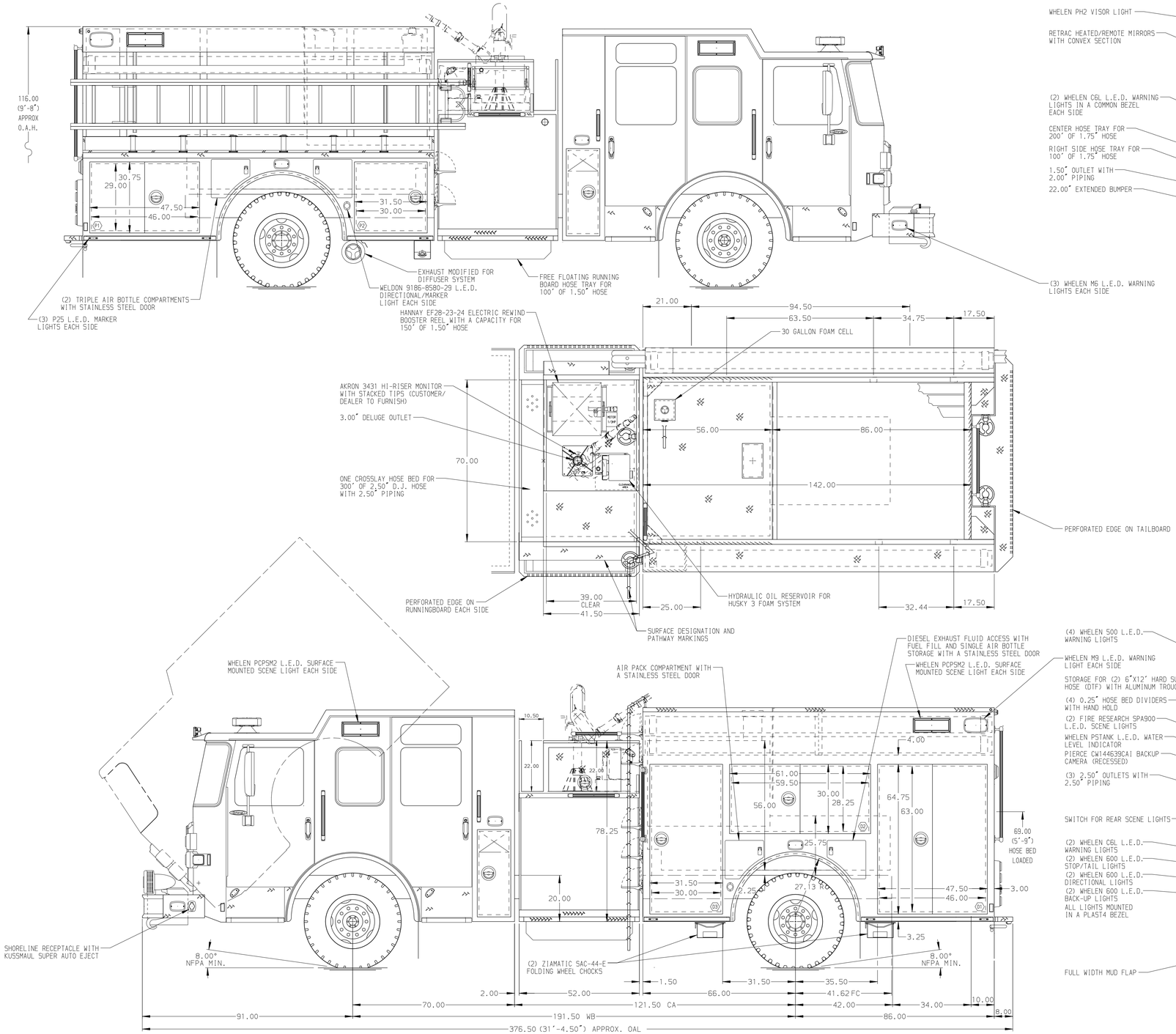

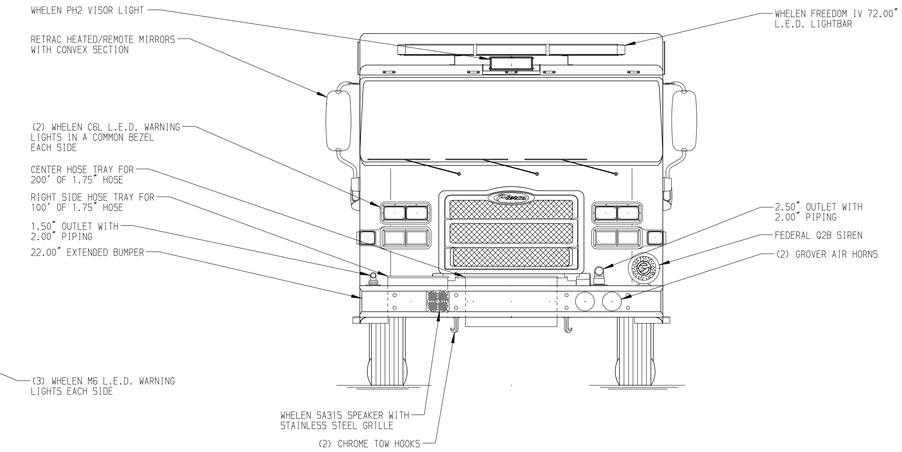

HOSEBED CAPACITIES

1. 250' OF 2.00" MERCEDES HOSE
2. 250' OF 2.00" MERCEDES HOSE
3. 250' OF 2.50" MERCEDES HOSE
4. 400' OF 3.00" MERCEDES HOSE
5. 1000' OF 5.00" MERCEDES HOSE

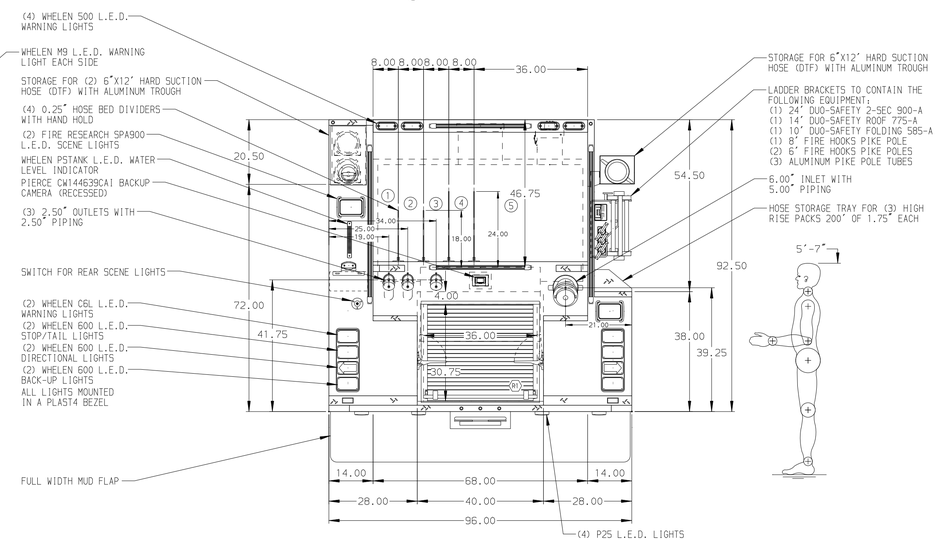

ALUMINUM BODY | SIDE ROLL AND FRONTAL IMPACT PROTECTION

NOTE

DIMENSIONS SHOWN ARE APPROXIMATE AND ARE SUBJECT TO MINOR DEVIATIONS AS MAY OCCUR OR BE NECESSARY IN CONSTRUCTION.
MINOR DETAILS NOT SHOWN.

1. BATTERY CHARGER LOCATED BEHIND DRIVER SEAT
2. BATTERY CHARGER INDICATOR LOCATED ON DRIVER SIDE SEAT RISER
3. ONE FULL WIDTH/DEPTH ADJUSTABLE SHELF WITH SIDES IN COMPARTMENT-D1,D3
4. ONE SWING-OUT TOOLBOARD WITH PEGBOARD PATTERN IN COMPARTMENT-D2
5. ONE FULL WIDTH/DEPTH FLOOR MOUNTED SLIDE-OUT TRAY WITH SIDES IN COMPARTMENT-D1,P1,P3,R1
6. CTECH THREE DRAWER CABINET IN COMPARTMENT-D3
7. PEGBOARD WITH TRACKS ON REAR WALL IN COMPARTMENT-D1,D2,D3
8. PARTITION BETWEEN COMPARTMENTS D1/R1 AND P1/R1
9. ONE DUPLEX RECEPTACLE IN COMPARTMENT-D1,P1
10. L.E.D. LIGHT STRIPS WALKING SURFACE LIGHTING LOCATED IN THE CARGO AREA

REV	DATE	BY	CH
3	10MAY18	BST	DTS
2	19APR18	BST	CSH
1	23FEB18	BST	AJA

CHASSIS DATA
MAKE: PIERCE
MODEL: ENFORCER

Pierce MANUFACTURING INC.

TITLE: 1500-D-750P W/30 GAL. FOAM CELL,DELUGE,BOOSTER REEL 152" PUMPER BODY,DS FH,PS LOW,LADDER BRACKETS
FOR: FRANKLIN TOWNSHIP FIRE DISTRICT #1-QUAKERTOWN PITTSTOWN, NJ
DWG NO.: 32191AD

JOB NO.	32191
SCALE	1:24
DATE	
DRAWN BY	BST 08FEB18
CHECKED BY	AJA 12FEB18
SHEET SIZE	D
SHEET NO.	1 OF 1

View File Created 10-MAY-2018 14:49:46