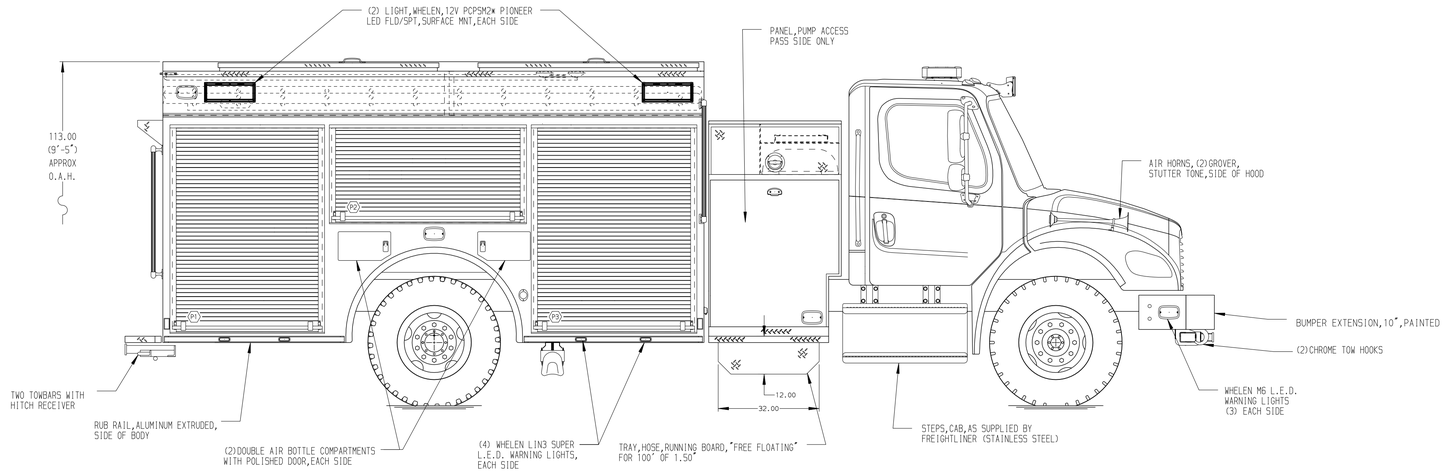

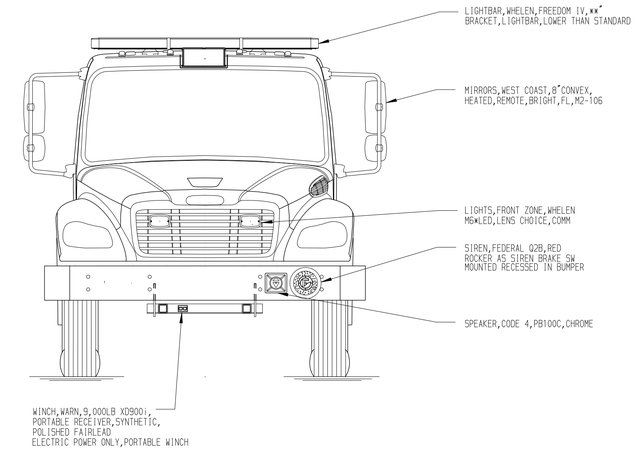

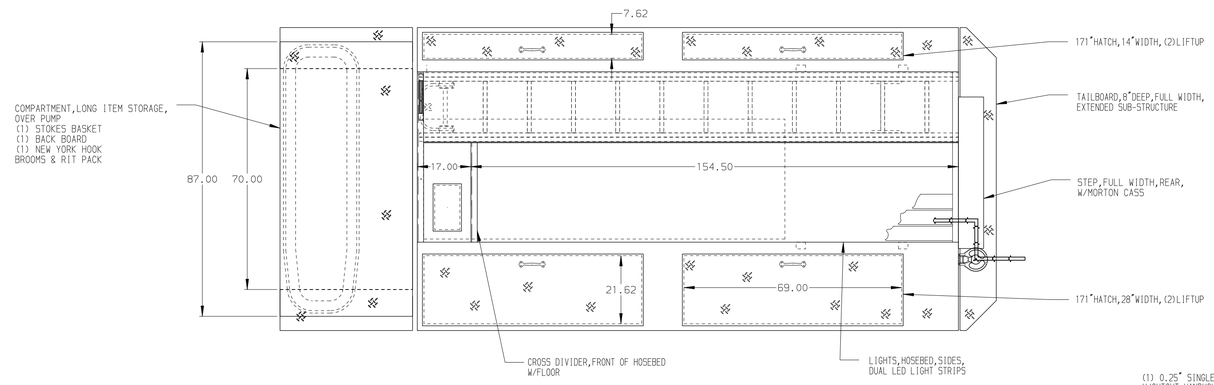

HOSEBED CAPACITIES

(1) -1000' OF 3.00" D.J. HOSE

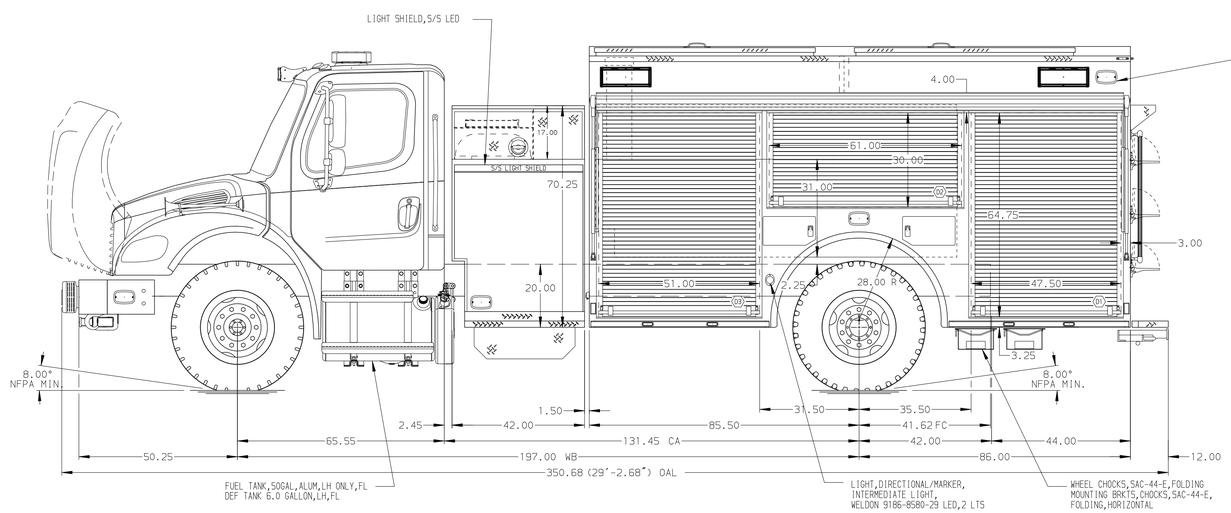

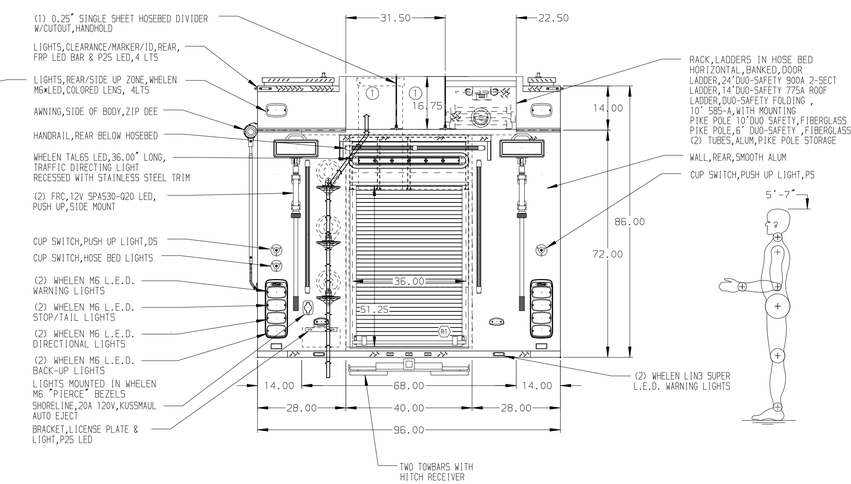

ALUMINUM BODY

MAXIMUM O.A.L. 351"

MAXIMUM O.A.H. 113"

NOTE

DIMENSIONS SHOWN ARE APPROXIMATE AND ARE SUBJECT TO MINOR DEVIATIONS AS MAY OCCUR OR BE NECESSARY IN CONSTRUCTION.
MINOR DETAILS NOT SHOWN.

REV	DATE	BY	CH
V	08MAR18	RWI	JAF

CHASSIS DATA
MAKE: FL
MODEL: M2-106

Pierce MANUFACTURING INC.

TITLE: 1250-D-500P,171",PUMPER,DS&PS FULL HGT&DPTH 42"SIDE CONTROL,STORAGE COMPARTMENT

FOR: NORTH LITTLE ROCK
NORTH LITTLE ROCK, ARKANSAS

DWG NO.: 32216AD

JOB NO.	32216
SCALE 1:24	DATE
DRAWN BY JLA	31JAN18
CHECKED BY RWI	02FEB18
SHEET SIZE D	SHEET NO. 1 OF 1

View File Created 08-MAR-2018 07:31:48