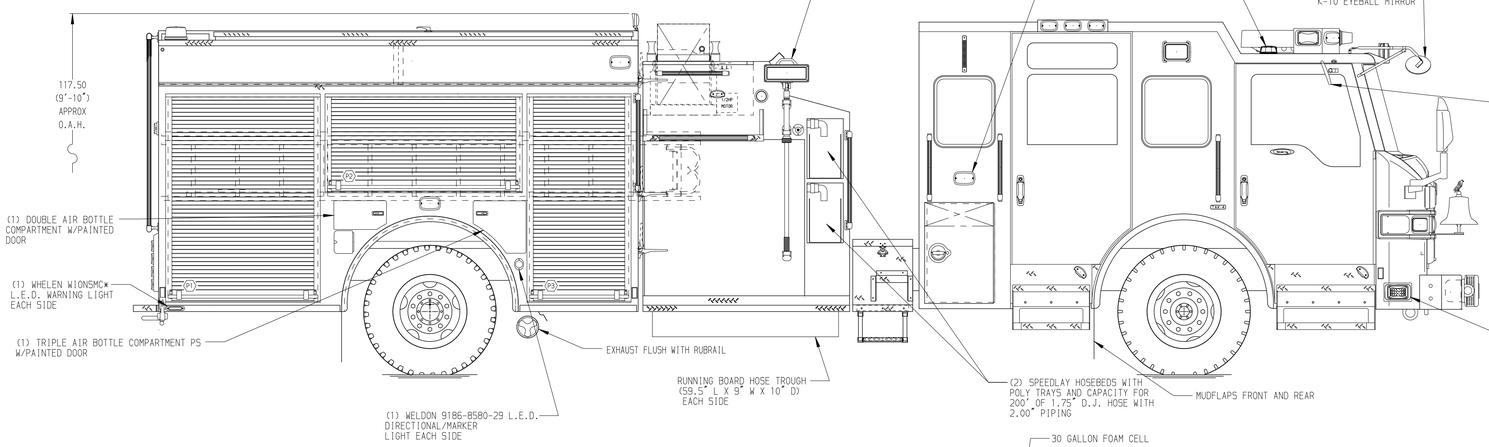

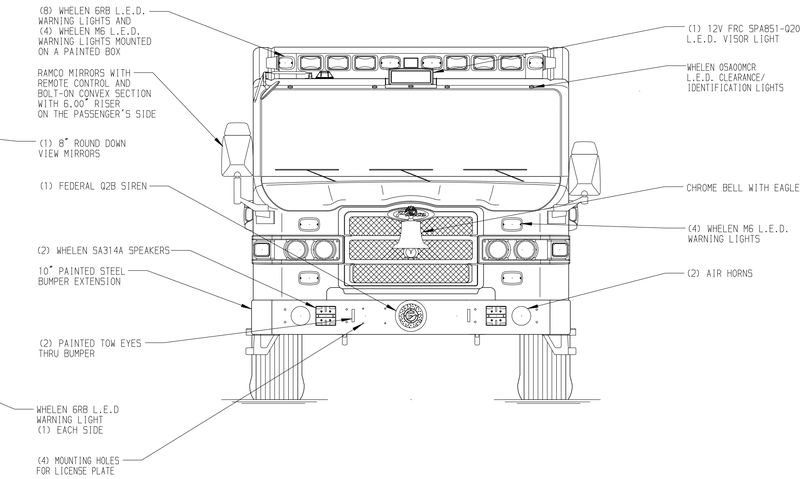

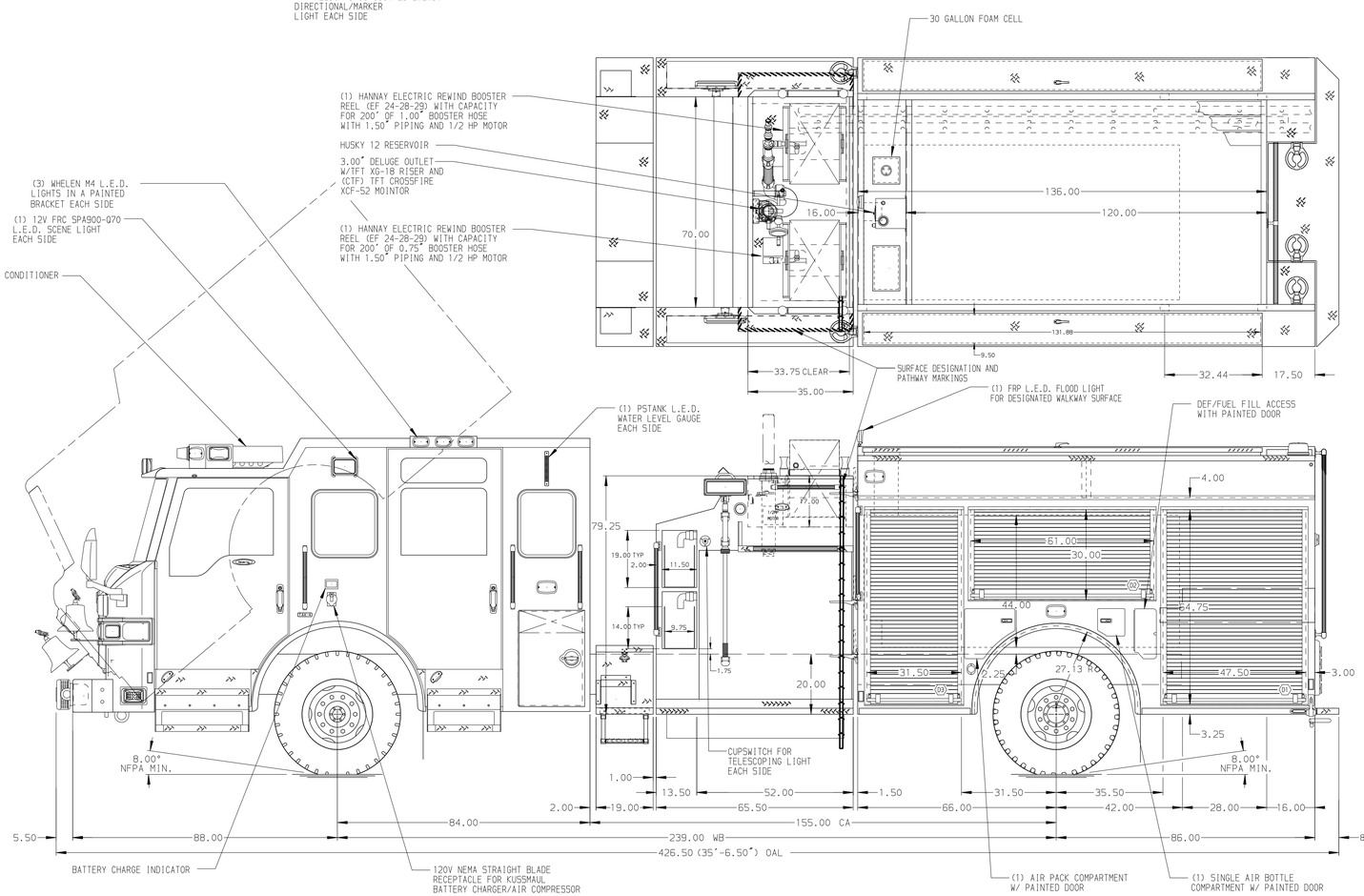

HOSEBED CAPACITIES

1. 200' OF 3.00" D.J. HOSE
2. 1000' OF 5.00" L.D. HOSE
3. 200' OF 1.75" D.J. HOSE
4. 400' OF 1.75" D.J. HOSE

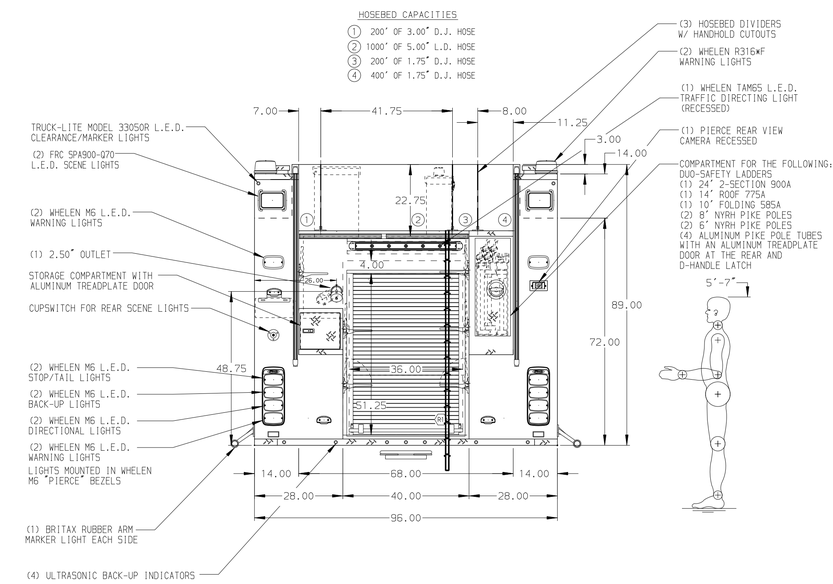

ALUMINUM BODY

SIDE ROLL AND FRONTAL IMPACT PROTECTION

NOTE

DIMENSIONS SHOWN ARE APPROXIMATE AND ARE SUBJECT TO MINOR DEVIATIONS AS MAY OCCUR OR BE NECESSARY IN CONSTRUCTION.
MINOR DETAILS NOT SHOWN.

1. DEALER SUPPLIED ZIAMATIC AC-32 WHEEL CHOCKS AND BRACKETS
2. AIR INLET/OUTLET WITH DISCONNECT FITTING LOCATED IN DRIVER'S PUMP PANEL
3. MOUNTING BASES FOR ANTENNAS LOCATED PER SHOP ORDER
4. BATTERY CHARGER/AIR COMPRESSOR LOCATED BEHIND DRIVER SEAT
5. S/STL PROTECTIVE GUARD FOR ALL ROLL-UP DOORS
6. ONE FLOOR MOUNTED SLIDE-OUT TRAY IN COMPARTMENT D1
7. SWING-OUT TOOL BOARD IN COMPARTMENT P1
8. ONE ADJUSTABLE SHELF IN COMPARTMENTS D2, P2, AND R1; TWO IN D1; FOUR IN D3 & P3
9. ONE SHELF TRACK SET LOCATED IN D1, D2, D3, R1, P2, AND P3
10. PERIMETER SCENE LIGHTS LOCATED PER SHOP ORDER
11. ALL ELECTRICAL EQUIPMENT MOUNTED ABOVE OR IN FRAME RAILS
12. HERCULES 200 CFM COMPRESSED AIR FOAM SYSTEM
13. DUAL MODULE VEHICLE DATA RECORDER
14. ALL FOLDING STEPS TO BE TRIDENT WITH INTEGRAL LED LIGHT
15. RUBBER FENDER CROWNS ON CAB AND BODY

REV	DATE	BY	CH
V	19APR18	AMI	LPA

CHASSIS DATA
MAKE: PIERCE
MODEL: VELOCITY

Pierce MANUFACTURING INC.

TITLE: 1500-D-750 GAL POLY W/30 GAL FOAM CELL, 152" FDLER (2) SPEEDLAYS, DELUGE, (2) BOOSTER REELS, CAFS
FOR: SAN ANTONIO FIRE DEPARTMENT, SAN ANTONIO, TEXAS
DWG NO.: 32240AD

JOB NO.	32240
SCALE 1:24	DATE
DRAWN BY AMI	28FEB18
CHECKED BY SMA	28FEB18
SHEET SIZE D	SHEET NO. 1 OF 1

View File Created 20-APR-2018 12:56:24