PASSENGER'S SIDE COMPARTMENTS CONTAIN THE FOLLOWING:

COMPARTMENT P1 CONTAINS:
- (1) SPECIAL SHELF FOR HYDRAULIC POWER UNIT
- (1) STD DEPTH ADJ SLIDE OUT TRAY
- (1) 15/20A,120V DUPLEX RECEPTACLE
- (1) 30A,120/240V T.L. RECEPTACLE
- (1) DUAL HYDRAULIC REEL WITH 100' OF HOSE
- (1) MOUNTING BRACKET FOR HYDRAULIC CUTTER
- (1) MOUNTING BRACKET FOR HYDRAULIC SPREADER
- (1) SLIDE OUT TRAY ON SPECIAL SHELF

COMPARTMENT P2 CONTAINS:
- (1) STORAGE RACK WITH 6 SLOTS
-

COMPARTMENT P3 CONTAINS:
- (1) BAUER K18.1-20-E3 BREATHING AIR COMPRESSOR
- (1) 0.75" TOOL AIR OUTLET
- (1) 0.25" TOOL AIR OUTLET

COMPARTMENT P4 CONTAINS:
- (1) VERTICAL COMPARTMENT DIVIDER
- (1) RACK FOR 4 SCBA BOTTLES
- (1) HORIZONTAL FLOOR EXTENSION
- (2) 1/2 DEPTH ADJ SHELVES
- (1) 1/2 DEPTH ADJ SLIDE OUT TRAY
- (1) 2-WAY ADJ SLIDE OUT TRAY
- (1) 1/2 DEPTH ADJ SLIDE OUT/TILT TRAY
- POLISHED S/S ON COMPARTMENT FLOOR
-

COMPARTMENT P5 CONTAINS:
- (1) AIR INLET/OUTLET W/SHUT-OFF VALVE
- (1) CAB LIFT CONTROLLER
- (1) VERTICAL COMPARTMENT DIVIDER
- (1) HORIZONTAL FLOOR EXTENSION
- (4) 1/2 DEPTH ADJ SLIDE OUT TRAYS
- (1) 2-WAY ADJ SLIDE OUT TRAY
- (2) 1/2 DEPTH ADJ SLIDE OUT/TILT TRAYS
- (1) 15/20A,120V DUPLEX RECEPTACLE
- (1) 60A,240V RECEPTACLE
- (1) 0.25" AIR OUTLET
- (1) HYDRAULIC REEL W/100' OF HOSE
- (1) ELECTRIC CORD REEL WITH 200' OF 10/4 YELLOW CORD
- (1) 0.25" TOOL AIR OUTLET
-

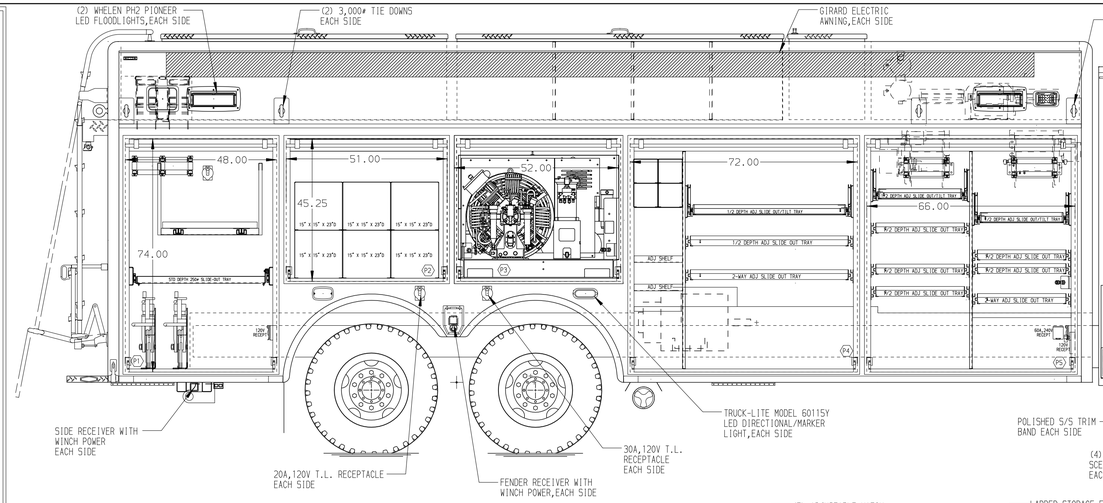

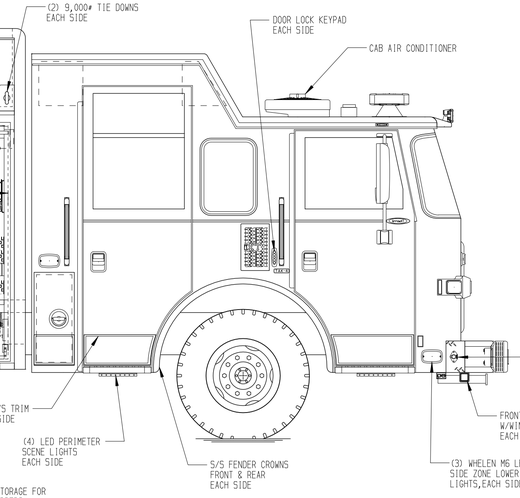

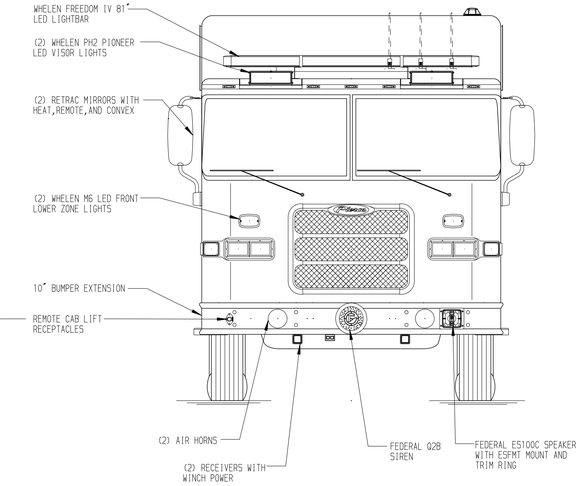

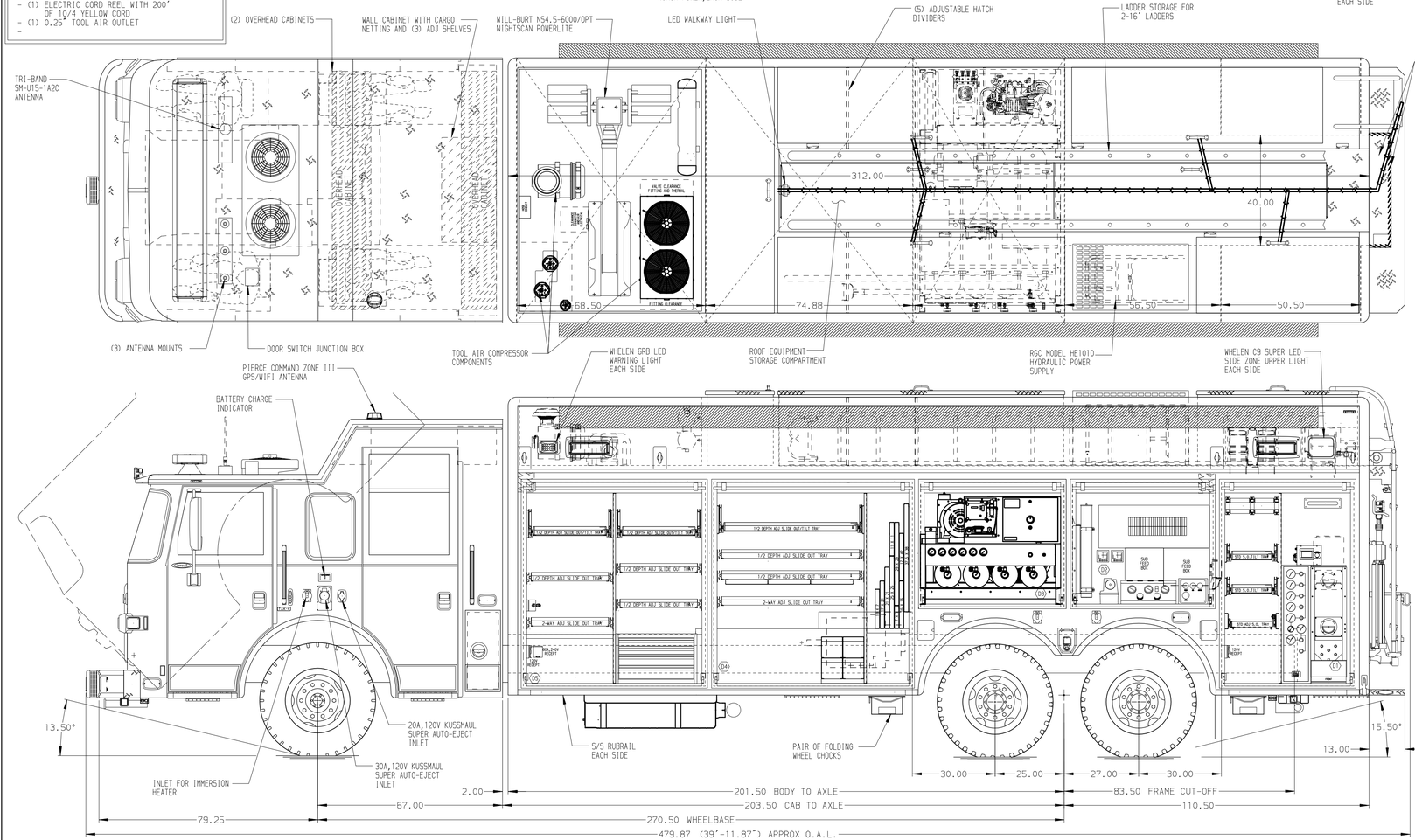

DRIVER'S SIDE COMPARTMENTS CONTAIN THE FOLLOWING:

COMPARTMENT D1 CONTAINS:
- (1) VERTICAL COMPARTMENT DIVIDER
- (1) STD DEPTH ADJ SLIDE OUT TRAY
- (2) STD DEPTH ADJ SLIDE OUT/TILT TRAYS
- (1) 15/20A,120V DUPLEX RECEPTACLE
- (1) 30A,120/240V T.L. RECEPTACLE
- (1) CASCADE SYSTEM CONTROL PANEL
- (1) "SPACESAVER"2-BOTTLE FILL ENCLOSURE
- (1) BREATHING AIR REEL W/300' OF HOSE
- (1) DUAL HYDRAULIC REEL WITH 100' OF HOSE
- (1) BREATHING AIR COMPRESSOR CONTROL
-
-
-

COMPARTMENT D2 CONTAINS:
- (2) SUB FEED BOXES
- (3) 15A,120V RECEPTACLE STRIPS
- (1) ZANTREX INVERTER
- (1) CIRCUIT BREAKER PANEL
- GENERATOR METER PANEL
- BREATHING AIR PURIFIERS
- (1) NIGHTSCAN CONTROLLER
- (1) VANAIR SYSTEM CONTROL PANEL
- (1) RGC SYSTEM CONTROL PANEL
-

COMPARTMENT D3 CONTAINS:
- (1) BAUER K18.1-20-E3 BREATHING AIR COMPRESSOR
-
-
-
-

COMPARTMENT D4 CONTAINS:
- (1) RACK FOR 10 AIR BAGS
- (1) RACK FOR 4 SCBA BOTTLES
- (1) VERTICAL COMPARTMENT DIVIDER
- (1) HORIZONTAL FLOOR EXTENSION
- (2) 1/2 DEPTH ADJ SLIDE OUT TRAYS
- (1) 2-WAY ADJ SLIDE OUT TRAY
- (1) 1/2 DEPTH ADJ SLIDE OUT/TILT TRAY
- (3) BLADE TRAYS UNDER SLIDE OUT TRAY
-
-
-

COMPARTMENT D5 CONTAINS:
- (1) AIR INLET/OUTLET W/SHUT-OFF VALVE
- (1) KUSSMAUL 1200 CHARGER
- (1) VERTICAL COMPARTMENT DIVIDER
- (1) HORIZONTAL FLOOR EXTENSION
- (3) 1/2 DEPTH ADJ SLIDE OUT TRAYS
- (1) 2-WAY ADJ SLIDE OUT TRAY
- (2) 1/2 DEPTH ADJ SLIDE OUT/TILT TRAYS
- (1) 4-DRAWER C-TECH CABINET
- (1) 0.25" AIR OUTLET
- (1) 15/20A,120V DUPLEX RECEPTACLE
- (1) 60A,240V RECEPTACLE
- (1) 0.25" TOOL AIR OUTLET
-

REAR COMPARTMENT CONTAINS THE FOLLOWING:

- (1) RACK FOR PLYWOOD SHEETS
- (1) 106"DP ADJ SLIDE OUT TRAY
- (1) HORIZONTAL FLOOR EXTENSION
- (2) 110"DP ADJ SHELVES
- (1) #1000 FLOOR MTD SLIDE OUT TRAY
- CARGO RETENTION NETTING
- POLISHED S/S ON COMPARTMENT FLOOR
- (1) ELECTRIC CORD REEL WITH 200' OF 10/4 YELLOW CORD
- (1) 0.75" TOOL AIR OUTLET
-
-
-

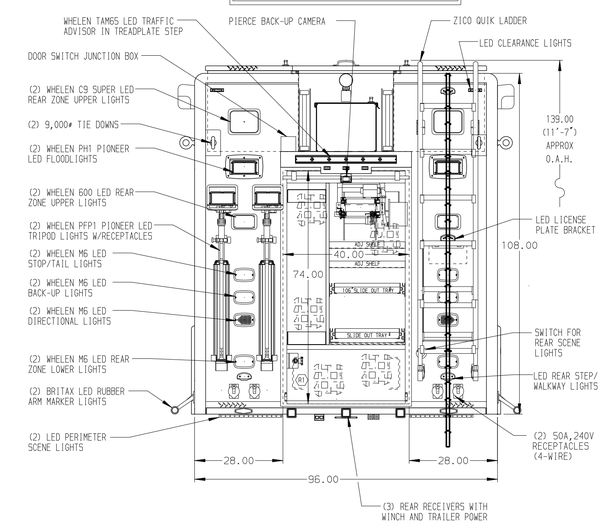

NOTE

DIMENSIONS SHOWN ARE APPROXIMATE AND ARE SUBJECT TO MINOR DEVIATIONS AS MAY OCCUR OR BE NECESSARY IN CONSTRUCTION.
MINOR DETAILS NOT SHOWN.

NOTES:
1. AIR INLET WITH DISCONNECT FITTING IN DRIVER'S SIDE LOWER STEP WELL OF CAB
2. (2) WARN #9,000 PORTABLE WINCHES
3. (2) AMKUS CAPSTAN ROPE RESCUE KITS
4. POLISHED S/S SCUFFPLATES ON CAB AND CREW CAB DOOR JAMBS
5. FLOOR IN CAB AND CREA CAB TO BE PADDED RUBBER
6. HANDHELD SPOTLIGHT LOCATED WITHIN REACH OF THE OFFICER
7. (3) #9,000 RECEIVER STYLE TIE DOWNS
8. ELECTRIC DOOR LOCKS ON ALL BODY COMPARTMENTS
9. PULL STAPS ON ALL BODY ROLL-UP DOORS
10. "L"-SHAPED S/S GUARDS ON ALL BODY ROLL-UP DOORS
11. ON-SCENE LED LIGHTS IN ALL BODY COMPARTMENTS
12. PIERCE LED STRIP LIGHTS LOCATED IN ALL HATCH COMPARTMENTS
13. DRI-DECK MATTING ON SHELVES AND TRAYS AND TURTLE TILE IN HATCH COMPARTMENTS
14. LIMA 40kW THREE PHASE PTO DRIVEN GENERATOR WITH SPLASH GUARD LOCATED BETWEEN THE FRAME RAILS
15. 15A,120V RECEPTACLE STRIP LOCATED ON PASSENGER'S SIDE TRAY IN CAB
16. ALUMINUM TREADPLATE ON CAB ROOF

TAK-4 T3 #44,000 REAR SUSPENSION

CLEAR DOOR WIDTH KEY

AMDOR ROLL UP DOORS:	-2 1/4"
GORILLE ROLL UP DOORS:	-2 1/2"
PIERCE DOUBLE LAP DOORS:	-4 1/4"
PIERCE LIFT-UP LAP DOORS:	-1 1/2"

(EX: 60"F-F - 2 1/4"= 57 3/4" CLEAR)
(F-F)= FRAME TO FRAME

REV	DATE	BY	CH
V	18APR18	DHE	AZU

CUSTOMER APPROVAL

APPROVED BY:_____

DATE:_____

Pierce MANUFACTURING INC.

CHASSIS DATA	
MAKE	PIERCE
MODEL	AX6720
DWG NO.	32249AD
TITLE	HEAVY DUTY RESCUE NON-WALKIN
FOR	CITY OF CHULA VISTA CHULA VISTA,CA TIM OLLEY
JOB NO.	32249
SCALE	1:24
DATE	
DRAWN BY	DHE 09FEB18
CHECKED BY	CDK 14FEB18
SHEET SIZE	D
SHEET NO.	1 OF 1

View File Created 20-APR-2018 11:31:28