PUMPER

BODY
Long Aluminum 2nd Gen Pumper

CHASSIS
Saber FR Chassis

CHASSIS

AXLE, FRONT, CUSTOM
18,000 lb Dana Axle

AXLE, REAR
24,000 lb Dana Axle

ENGINE
450 HP Cummins L9 Engine

TRANSMISSION
Allison 5th Gen, 3000 EVS P

BUMPER
19" Extended Stainless Steel

CAB
7010 Saber FR Cab

BODY

WATER TANK
750 Gallon Poly Water Tank

COMPT, PUMPER, REAR
37.75" FF Rollup Rear Compt

COMPT, PUMPER, DRIVER SIDE
161" Rollup Full Height & Depth Front & Rear

COMPT, PUMPER PASS. SIDE
161" Rollup Full Height Front & Rear FDLER

FIRE SUPPRESSION

PUMPHOUSE
45" Control Zone Top Mount

PUMP
1500 GPM Hale QMAX

CROSSLAYS, 1.50"
1.50" Crosslays Not Required

CROSSLAYS, 2.50"
2.50" Crosslay Not Required

SPEEDLAYS
(2) 1.50" Std. Capacity, 9.00" Opening

GENERATOR
Generator Not Required

Foam System
Foam System Not Required

Foam Cell
Foam Cell Not Required

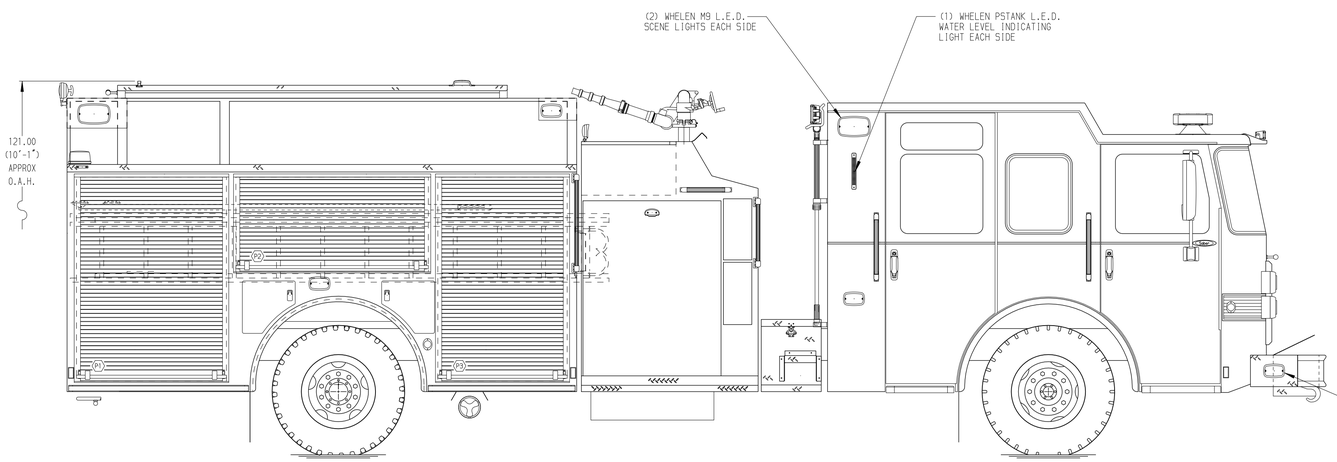

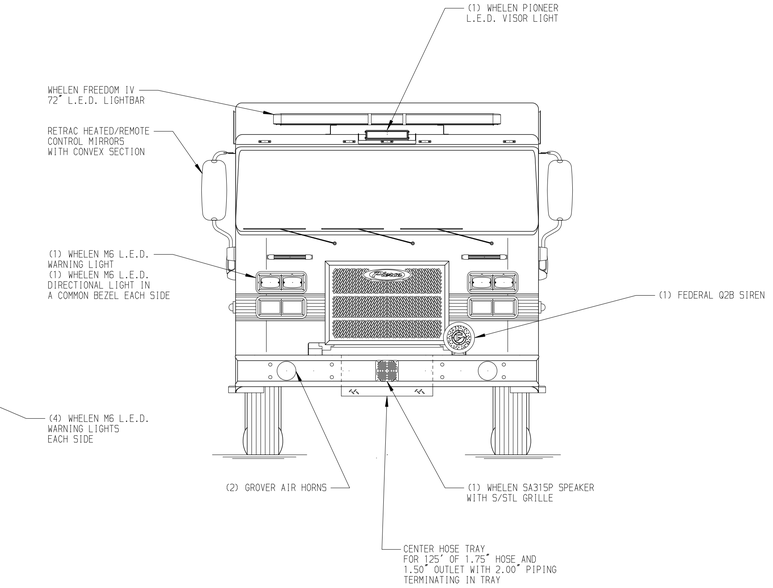

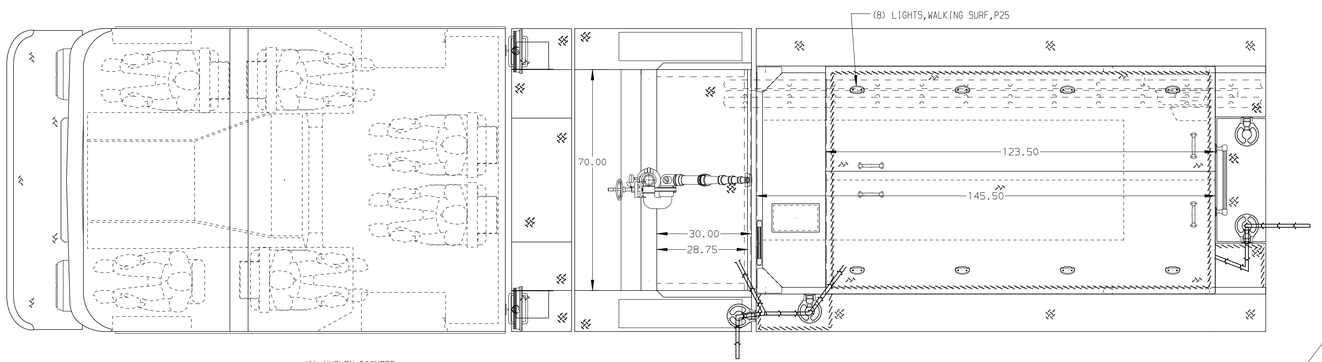

HOSEBED CAPACITY

BED 1
500' OF 3.00" D.J. POLY HOSE

BED 2
1000' OF 5.00" D.J. POLY HOSE

BED 3
500' OF 3.00" D.J. POLY HOSE

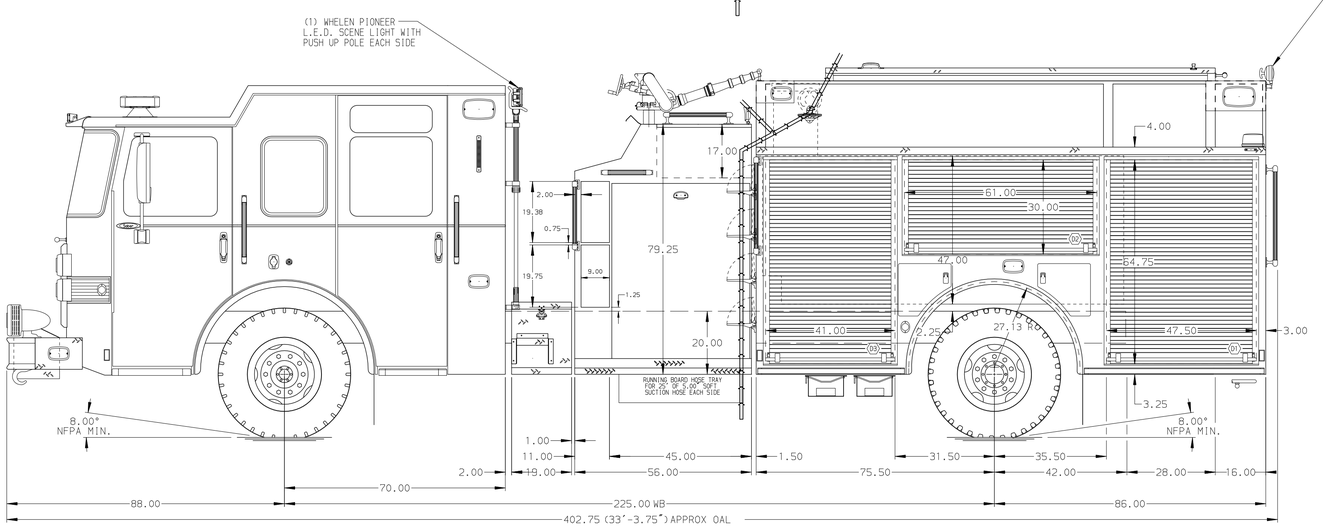

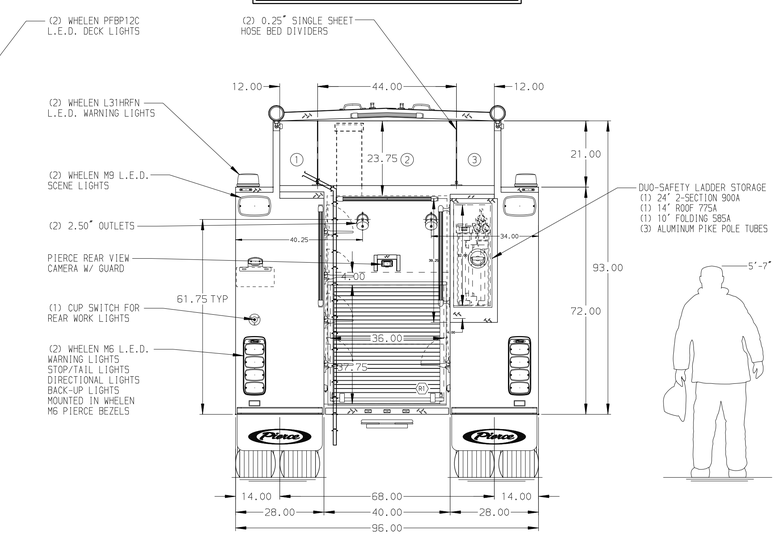

NOTE
DIMENSIONS SHOWN ARE APPROXIMATE AND ARE SUBJECT TO MINOR DEVIATIONS AS MAY OCCUR OR BE NECESSARY IN CONSTRUCTION.
MINOR DETAILS NOT SHOWN.

REV	DATE	BY	CH
V	26JAN18	JLA	RWI

CHASSIS DATA	–
MAKE	PIERCE
MODEL	SABER FR

Pierce MANUFACTURING INC.

TITLE	Pierce Pumper Approval Drawing –	JOB NO.	32271 01-02
		SCALE 1:24	DATE
FOR	Massillon Fire Department –	DRAWN BY COL	03JAN18
		CHECKED BY KBO	05JAN18
DWG NO.	32271AD	SHEET SIZE D	SHEET NO. 1 OF 1

View File Created 26-JAN-2018 10:26:58