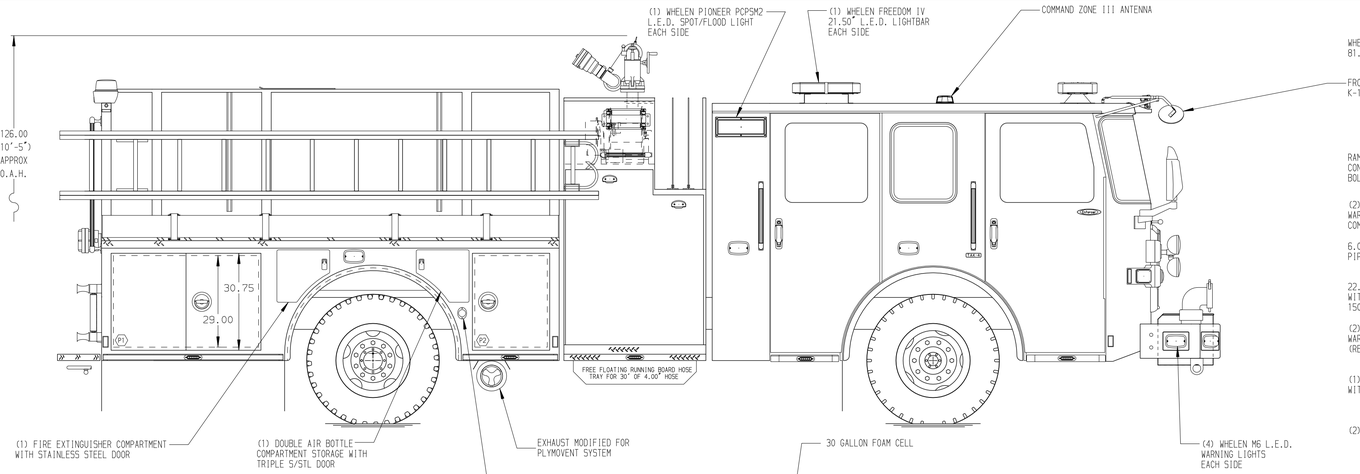

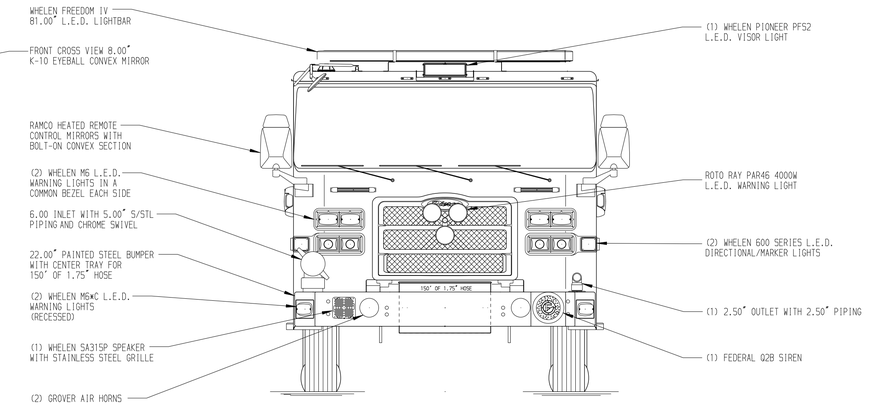

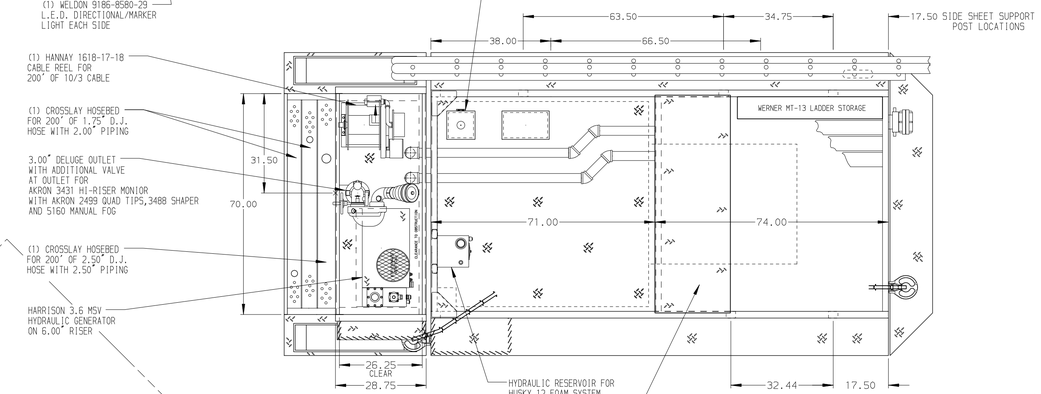

HOSEBED CAPACITIES

1. - 400' OF 3.00" D.J. HOSE
2. -1200' OF 4.00" D.J. HOSE
3. - 300' OF 1.88" D.J. HOSE
4. - 400' OF 1.88" D.J. HOSE

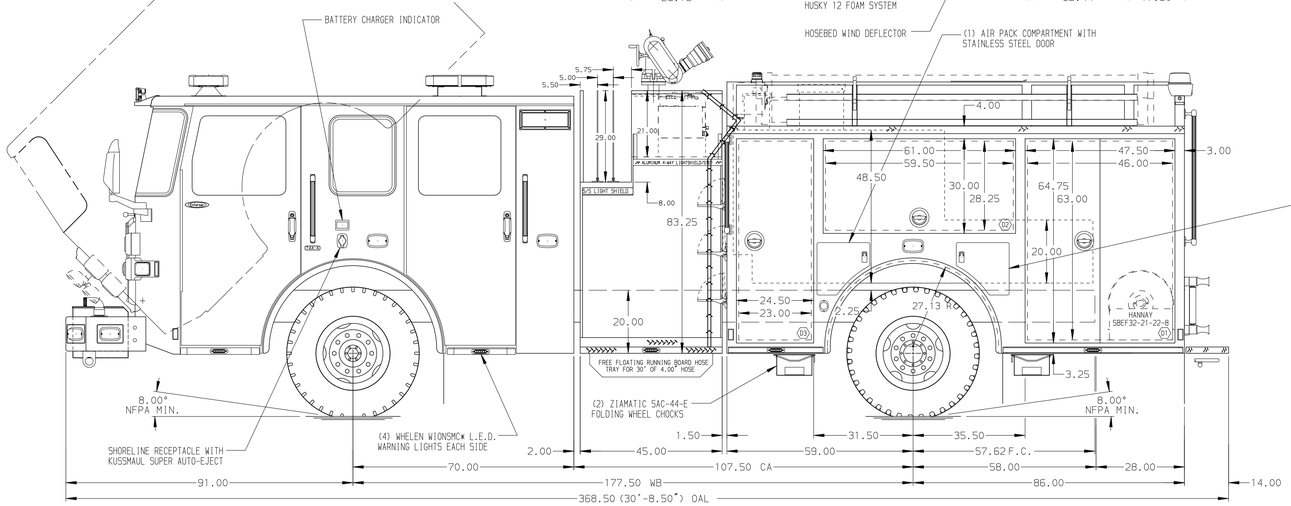

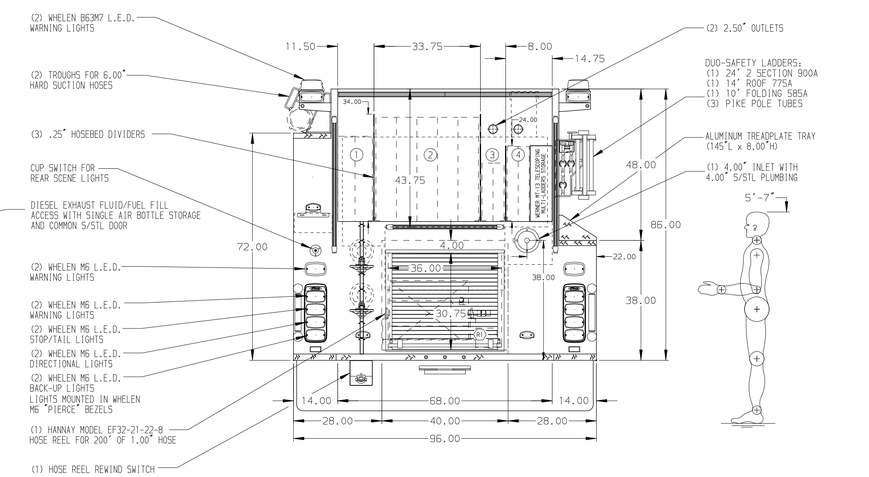

ALUMINUM BODY

SIDE ROLL AND FRONTAL IMPACT PROTECTION

NOTE

DIMENSIONS SHOWN ARE APPROXIMATE AND ARE SUBJECT TO MINOR DEVIATIONS AS MAY OCCUR OR BE NECESSARY IN CONSTRUCTION.
MINOR DETAILS NOT SHOWN.

1. ONSPOT AUTOMATIC TIRE CHAINS TO BE PROVIDED AT REAR
2. BATTERY CHARGER LOCATED BEHIND DRIVER'S SEAT
3. ONE FULL WIDTH/DEPTH ADJUSTABLE SHELF LOCATED IN COMPARTMENTS ???
4. ONE FLOOR MOUNTED SLIDE-OUT TRAY IN COMPARTMENTS P1,P2
5. ALL BODY COMPARTMENTS WITH LOUVERS SHALL HAVE A REMOVABLE FILTER
6. ADJUSTABLE PAC TRACK AND TOOL POCKED ON PASSENGER'S SIDE FRONT BULKHEAD
7. PARTITION BETWEEN COMPARTMENTS D1/R1 AND P1/R1
8. CIRCUIT BREAKER PANEL IN COMPARTMENT D3
9. AIR INLET/OUTLET WITH DISCONNECT FITTING ON D.S. PUMP PANEL

REV	DATE	BY	CH
7	05APR18	JWO	CDU

CHASSIS DATA
MAKE: PIERCE
MODEL: ENFORCER

CUSTOMER APPROVAL
APPROVED BY:
DATE:

Pierce MANUFACTURING INC.

TITLE: 1500-D-750GAL WATER, 30GAL FOAM, 145" SPC SHORT BODY (3) CROSSLAYS, DELUGE, BOOSTER REEL, CABLE REEL
FOR: SPOTSYLVANIA COUNTY FIRE & RESCUE
SPOTSYLVANIA, VIRGINIA
DWG NO. 32289AD

JOB NO.	SCALE	DRAWN BY	CHECKED BY	SHEET SIZE	SHEET NO.
32289	1:24	JWO	CDU	D	1 OF 1
	DATE	23MAR18	27MAR18		

View File Created 05-APR-2018 15:28:18