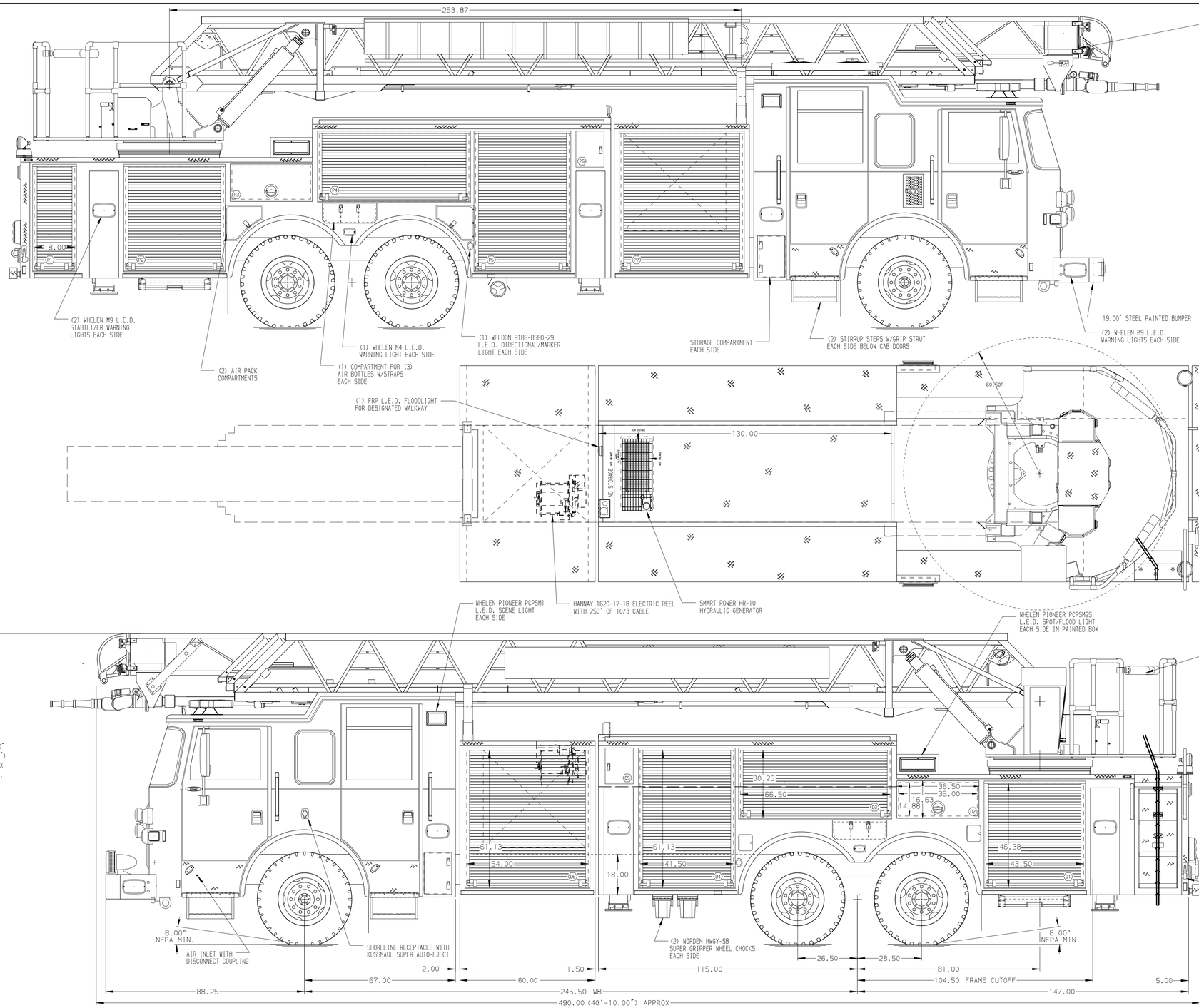

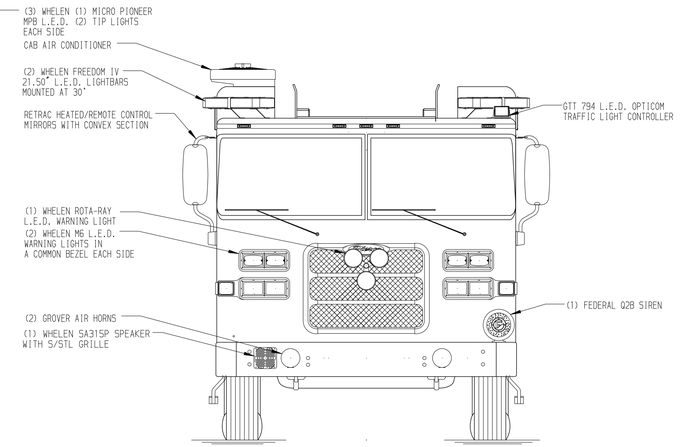

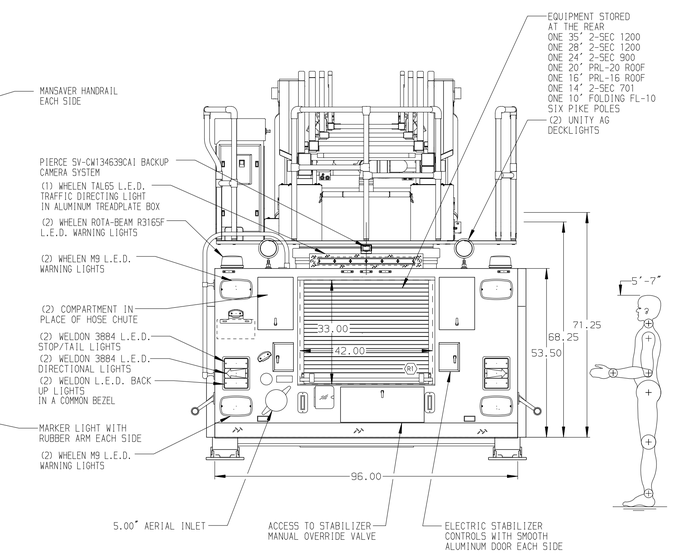

ALUMINUM BODY

NOTE

DIMENSIONS SHOWN ARE APPROXIMATE AND ARE SUBJECT TO MINOR DEVIATIONS AS MAY OCCUR OR BE NECESSARY IN CONSTRUCTION.
MINOR DETAILS NOT SHOWN.

1. ALUMINUM TREADPLATE EXTERIOR REAR WALL OF CAB
2. 120V POWER TO AERIAL TIP
3. BATTERY CHARGER/COMPRESSOR BEHIND PASSENGER'S SEAT WITH COVER
4. BATTERY CHARGER INDICATOR BEHIND DRIVER'S SEAT DISPLAYED THROUGH WINDOW
5. PERIMETER SCENE LIGHTS LOCATED PER SHOP ORDER
6. 2-WAY INTERCOM SYSTEM BETWEEN AERIAL TIP AND TURNTABLE
7. S/STL PROTECTIVE GUARD FOR ROLL-UP DOOR IN COMPARTMENTS D1,D3,D4,D6,P1,P2,P4,P5,P7
8. PIERCE L.E.D. DUAL COMPARTMENT LIGHT STRIPS LOCATED PER SHOP ORDER
9. PAINTED SHELF TRACKS LOCATED IN COMPARTMENT D1,D3,D4,D6,P2,P5,P7
10. ONE 500LB FULL WIDTH/DEPTH PAINTED ADJUSTABLE SHELF IN COMPARTMENT D1,D4,P2,P5
11. ONE 500LB ADJUSTABLE 2-WAY SLIDE-OUT TRAY IN TRANSVERSE COMPARTMENT D6/P7
12. ONE ADJUSTABLE TILTING SLIDE-OUT 215LB TRAY IN COMPARTMENT D3
13. ONE FLOOR MOUNTED SLIDE-OUT 500LB TRAY IN COMPARTMENT D1,D4,P2,P5
14. SWING-OUT ALUMINUM TOOLBOARD COMPARTMENT P4
15. TURTLE TILE MATTING ON SHELF/TRAY IN ALL COMPARTMENTS WITH TRAYS QTY 10
16. CIRCUIT BREAKER PANEL IN COMPARTMENT D6
17. LIFTING EYE RESCUE ATTACHMENT AT AERIAL TIP
18. TRIDENT FOLDING STEPS MOUNTED ON AERIAL DEVICE PER SHOP ORDER
19. 21.00" AERIAL LIMITED RETRACTION
20. REMOTE LADDER CONTROLS AT AERIAL TIP
21. STABILIZERS MODIFIED FOR 18" GROUND PENETRATION
22. L.E.D. LIGHTING ON AERIAL LADDER SECTIONS
23. 3.00" RAISED PEDESTAL
24. ONE VERTICAL PARTITION LOCATED IN COMPARTMENT P4

REV	DATE	BY	CH
10APR18	SVA	PJP	
14MAR18	SVA	PJP	
16FEB18	LWE	GRM	

CHASSIS DATA
MAKE: PIERCE
MODEL: ARROW XT

Pierce MANUFACTURING INC.

TITLE: 105 AERIAL LADDER & BODY ASSEMBLY
NO PUMP/NO TANK
FOR: FISHERS FIRE DEPARTMENT
FISHERS, IN

DWG NO.: 32344AD

JOB NO.	32344
SCALE	1:24
DATE	
DRAWN BY	LWE 30JAN18
CHECKED BY	CRI 30JAN18
SHEET SIZE	D
SHEET NO.	1 OF 1

View File Created 11-APR-2018 07:28:03