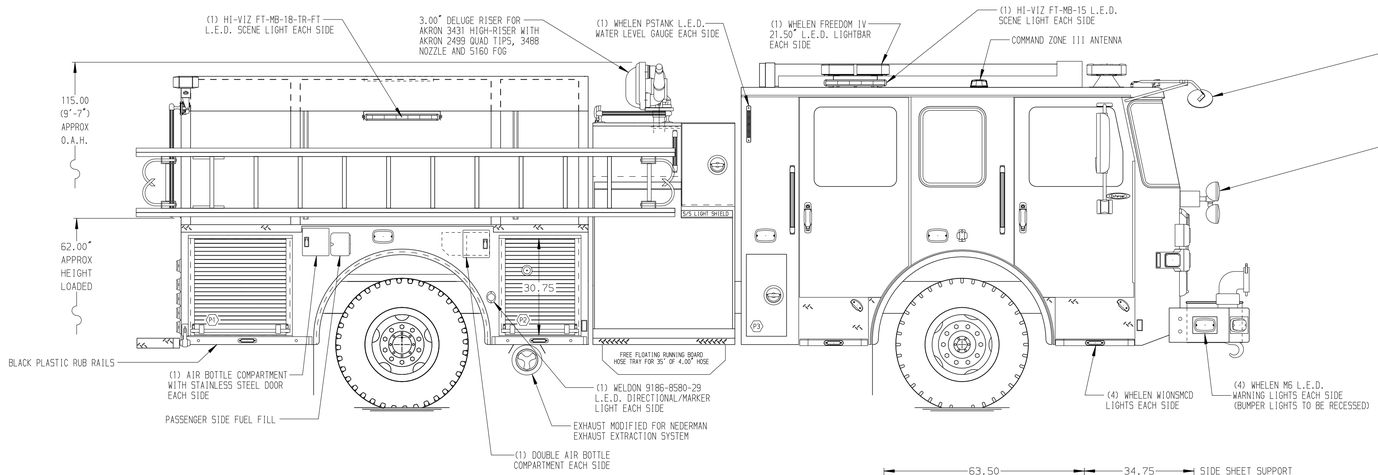

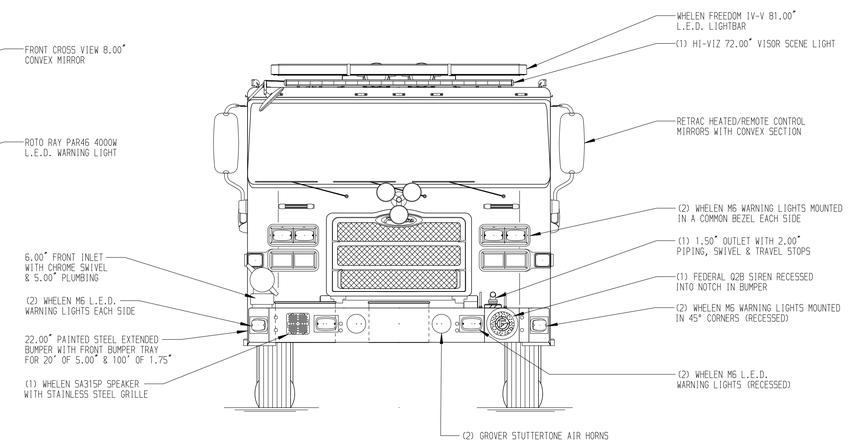

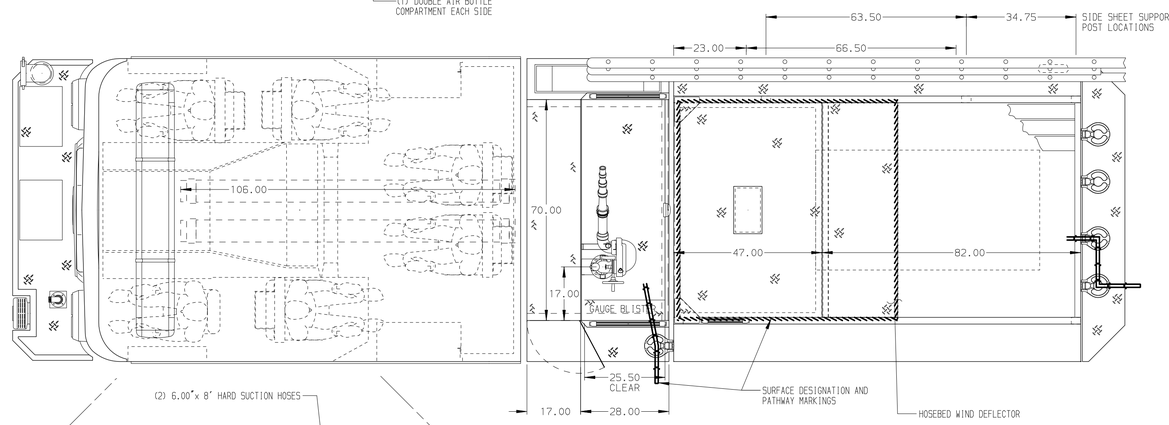

HOSEBED CAPACITIES

1. 200' OF 2.50" D.J. POLY HOSE
2. 200' OF 1.75" D.J. POLY HOSE
3. 250' OF 1.75" D.J. POLY HOSE
4. 600' OF 3.00" D.J. POLY HOSE
5. 1000' OF 4.00" D.J. POLY HOSE
6. 150' OF 1.75" D.J. POLY HOSE
7. 250' OF 2.50" D.J. POLY HOSE

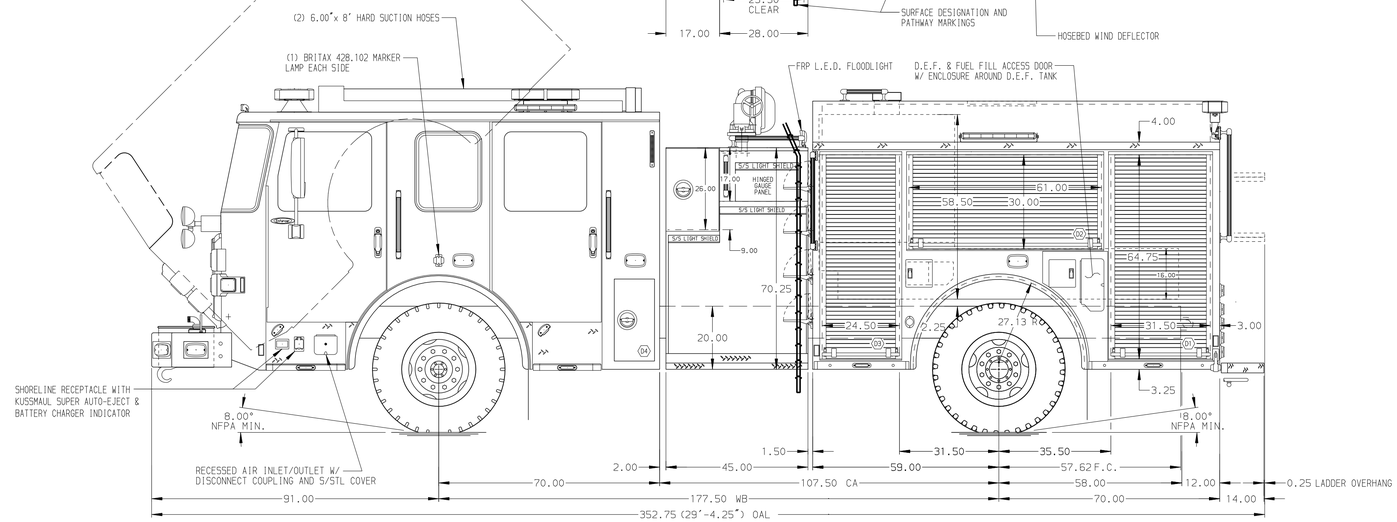

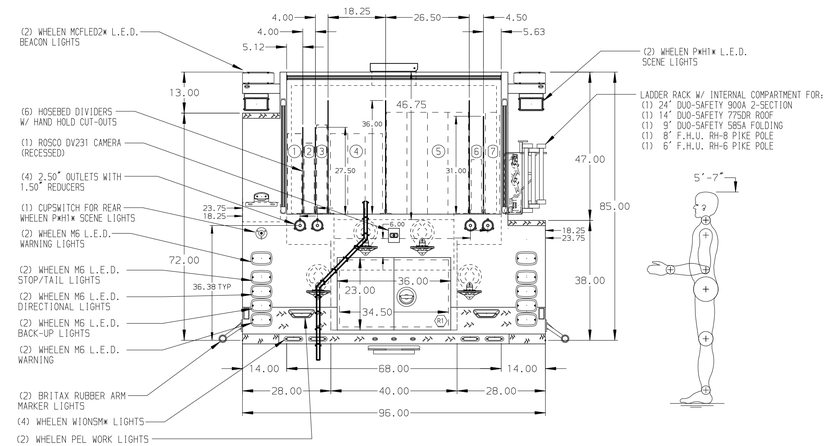

ALUMINUM BODY | MAXIMUM O.A.L. 353" | MAXIMUM O.A.H. 118" | SIDE ROLL AND FRONTAL IMPACT PROTECTION

CUSTOMER APPROVAL

APPROVED BY: _____

DATE: _____

Pierce MANUFACTURING INC.

NOTE

DIMENSIONS SHOWN ARE APPROXIMATE AND ARE SUBJECT TO MINOR DEVIATIONS AS MAY OCCUR OR BE NECESSARY IN CONSTRUCTION.
MINOR DETAILS NOT SHOWN.

1. ANCHOR PLATE FOR NEDERMAN SYSTEM APPROX. 25.50" FROM CL OF EXHAUST EXTRACTOR
2. DRIP PAN GUARD FOR ROLL-UP DOOR LOCATED ON ALL COMPARTMENTS
3. ONE ZIAMATIC SCBA HOLDER BRACKET SHIPPED LOOSE
4. ONE PAC TRAC ON THE REAR WALL OF COMPARTMENT D1, D2, & D3
5. ONE 500LB FULL WIDTH/DEPTH SHELF IN COMPARTMENTS D1, D3, P1, AND P2
6. FULL LENGTH BRUSHED S/STL SCUFFPLATE UNDER D.E.F. FILL DOOR
7. CARGO AREA ABOVE PUMP TO HAVE 4-WAY ACCESS DOOR WITH GAS STRUTS & CHROME HANDLE
8. PULL STRAPS FOR DOOR IN COMPARTMENTS D1, D2 & D3

REV	DATE	BY	CH
▽	-	-	-

CHASSIS DATA — MAKE: PIERCE — MODEL: ENFORCER

TITLE: 1500-D-700P, 129" SP BODY, 45" SIDE CONTROL PUMPHOUSE NEW YORK HOSEBED, SP REAR COMPT,(2)HSH'S, LDRS ON PS SS

FOR: PRINCE GEORGE'S COUNTY FIRE & EMS LARGO, MARYLAND

DWG NO.: 32355AD

JOB NO.	32355
SCALE	1:24
DATE	
DRAWN BY	CUP
DATE	12APR18
CHECKED BY	SMA
	-
SHEET SIZE	D
SHEET NO.	1 OF 1

View File Created 13-APR-2018 07:12:13