PASSENGER'S SIDE COMPARTMENTS CONTAIN THE FOLLOWING:

COMPARTMENT P1 CONTAINS:

- (1) PARTITION,VERTICAL
  - (2) TOOLBOARDS,ALUM,ADJ,ADDED TO STD DEPTH SLIDE-OUT TRAY
- (4) SHELVES,ADJUSTABLE,500 LB CAPACITY, STANDARD DEPTH

COMPARTMENT P2 CONTAINS:

- (1)TRAY,500 LB,SLIDE-OUT,2"SIDES, ADJ HEIGHT,STD DEPTH COMPT

COMPARTMENT P3 CONTAINS:

- (3)TRAYS,500 LB,SLIDE-OUT,2"SIDES, ADJ HEIGHT,STD DEPTH COMPT

COMPARTMENT P4 CONTAINS:

- (2) ELECTRIC CORD REELS WITH 200' OF 12/3 YELLOW CORD
- (3)TRAYS,500 LB,SLIDE-OUT,2"SIDES, ADJ HEIGHT,STD DEPTH COMPT

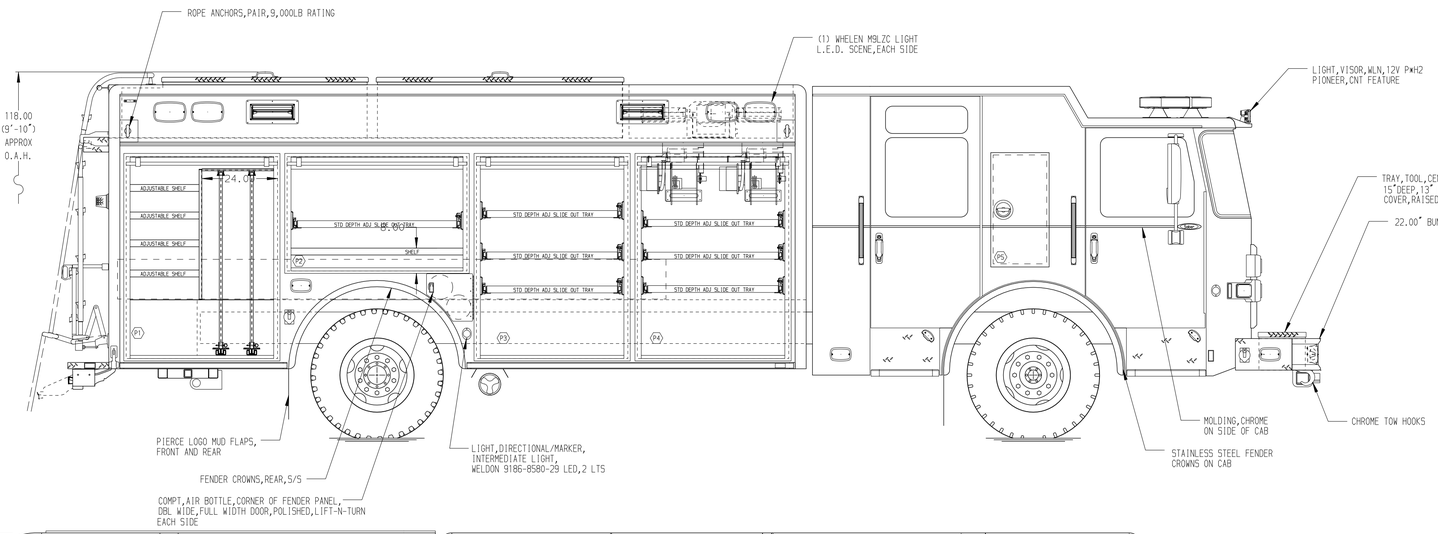

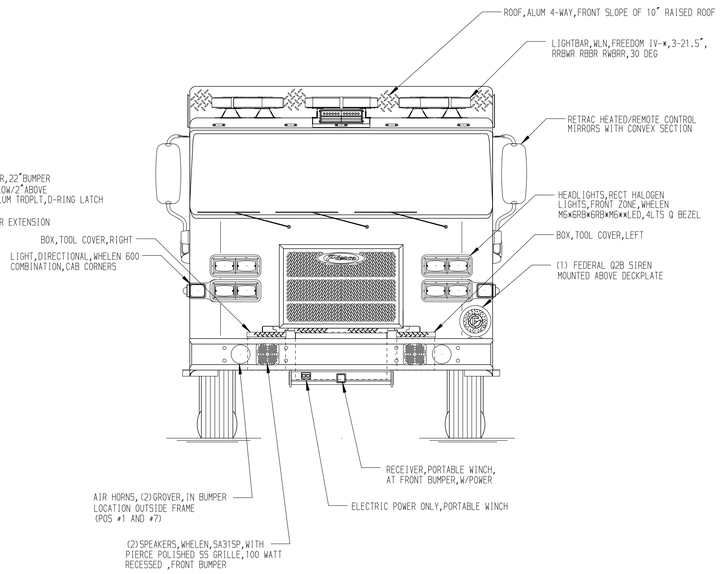

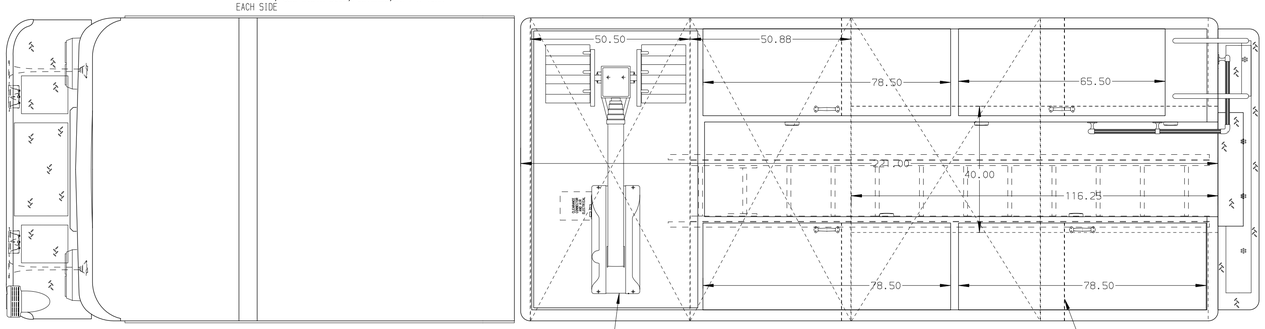

REAR COMPARTMENT CONTAINS THE FOLLOWING:

COMPARTMENT R1 CONTAINS:

- RACK,EQUIPMENT STORAGE,TRDPLT DROP DOWN DOOR
- (2) TUBES,PIKE POLE,STORAGE
- TROUGH/LADDER,24"DUO-SAFETY YGE-2 SECT,FIBERGLASS
- TROUGH/LADDER,14"DUO-SAFETY YGR FIBERGLASS ROOF
- TROUGH/LADDER,10",DUO-SAFETY FOLDING 585A,HDR
- (1) TRAY,FLOOR MOUNTED,SLIDE-OUT, STD. DEPTH COMPT,500LB,2.00" SIDES

DRIVER'S SIDE COMPARTMENTS CONTAIN THE FOLLOWING:

COMPARTMENT D1 CONTAINS:

- (1) TRAY,FLOOR MOUNTED,SLIDE-OUT, STD. DEPTH COMPT,500LB,2.00" SIDES
- (1) VERTICAL COMPARTMENT DIVIDER
- (2) REELS,HYD,HANNAY,100'CAP,.25"DUAL HOSE
- (1)TRAY,500 LB,SLIDE-OUT,2"SIDES, ADJ HEIGHT,STD DEPTH COMPT
- (2) SHELVES,ADJUSTABLE,500 LB CAPACITY, STANDARD DEPTH

COMPARTMENT D2 CONTAINS:

- (4) VERTICAL DIVIDERS
- (1) SHELF,ADJUSTABLE,500 LB CAPACITY, STANDARD DEPTH

COMPARTMENT D3 CONTAINS:

- (2)TRAYS,500 LB,SLIDE-OUT,2"SIDES, ADJ HEIGHT,STD DEPTH COMPT
- (1) SHELF,ADJUSTABLE,500 LB CAPACITY, STANDARD DEPTH

COMPARTMENT D4 CONTAINS:

- (1) RACK,STOKES/STRETCHER BASKET,
- (1) "SPACESAVER" 2-BOTTLE FILL ENCLOSURE
- (1) CASCADE SYSTEM CONTROL PANEL
- (1) VERTICAL DIVIDER
- (2) SHELVES,ADJUSTABLE,500 LB CAPACITY, STANDARD DEPTH

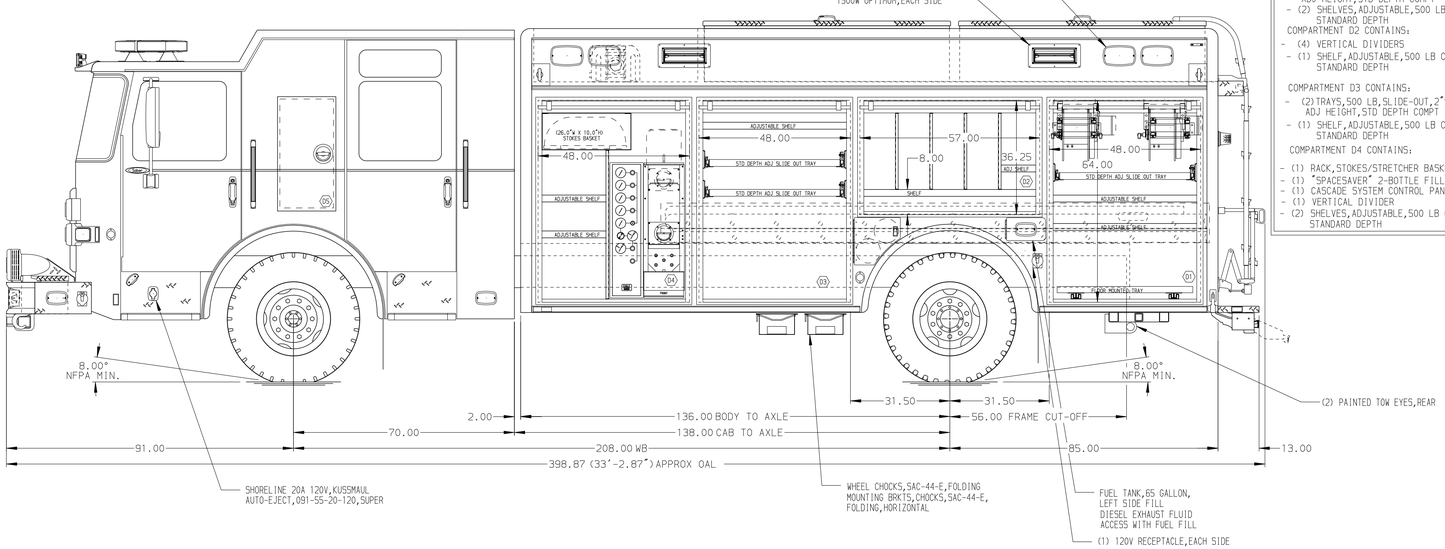

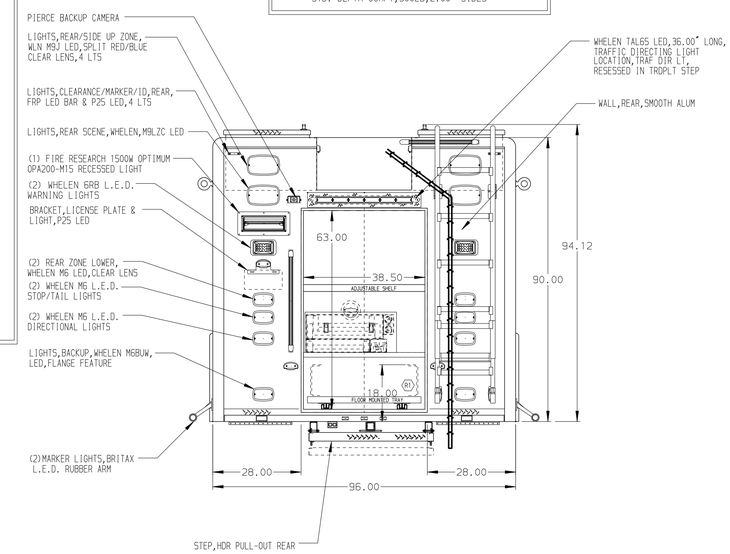

NOTE

DIMENSIONS SHOWN ARE APPROXIMATE AND ARE SUBJECT TO MINOR DEVIATIONS AS MAY OCCUR OR BE NECESSARY IN CONSTRUCTION.
MINOR DETAILS NOT SHOWN.

REV	DATE	BY	CH
V	10MAY18	RWI	JAF

CHASSIS DATA — MAKE: PIERCE — MODEL: SBFR7010

Pierce MANUFACTURING INC.

TITLE: HEAVY DUTY RESCUE,18.50' BODY NON-WALKIN,REAR LAP DOOR

FOR: WASHINGTON FIRE DEPARTMENT WASHINGTON,MISSOURI

DWG NO.: 32385AD

JOB NO.	SCALE	DRAWN BY	CHECKED BY	SHEET SIZE	SHEET NO.
32385	1:24	JAF	RWI	D	1 OF 1

DATE: 23APR18 — 25APR18

View File Created 10-MAY-2018 08:29:56