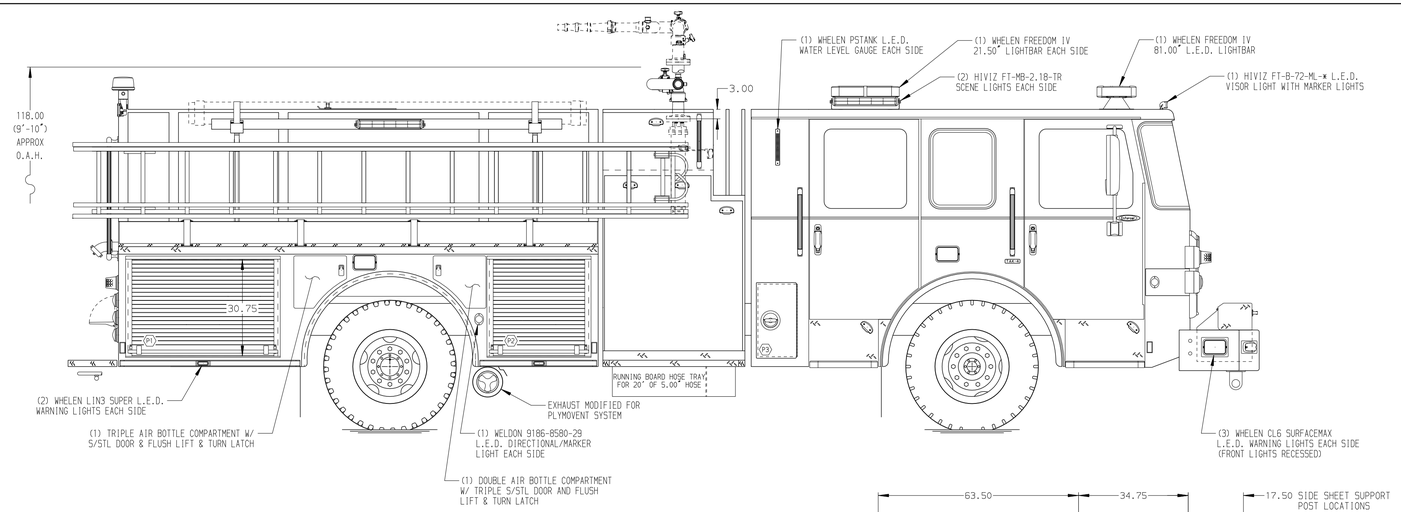

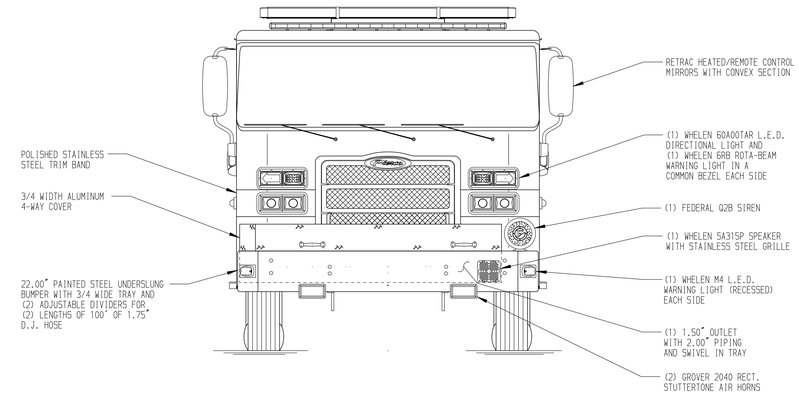

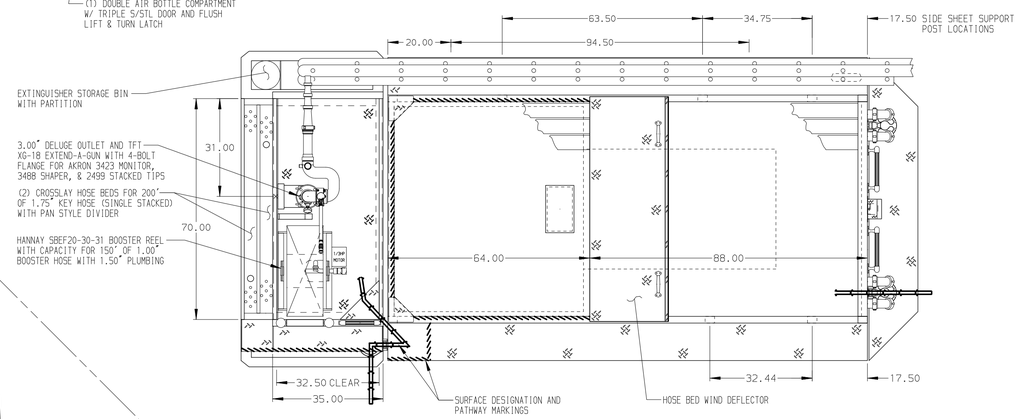

HOSEBED CAPACITIES

1. - 200' OF 2.50" D.J. HOSE
2. - 300' OF 1.75" D.J. HOSE
3. -1000' OF 5.00" D.J. HOSE
4. - 300' OF 2.50" D.J. HOSE
5. - 200' OF 2.50" D.J. HOSE

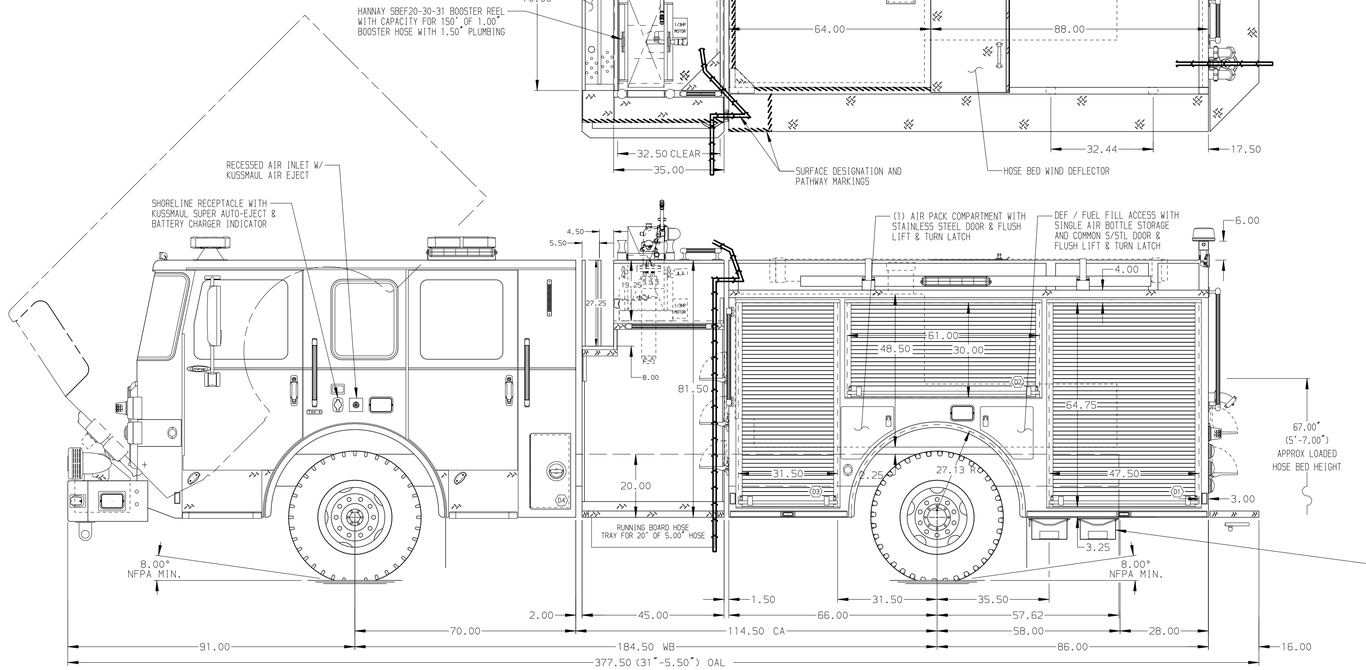

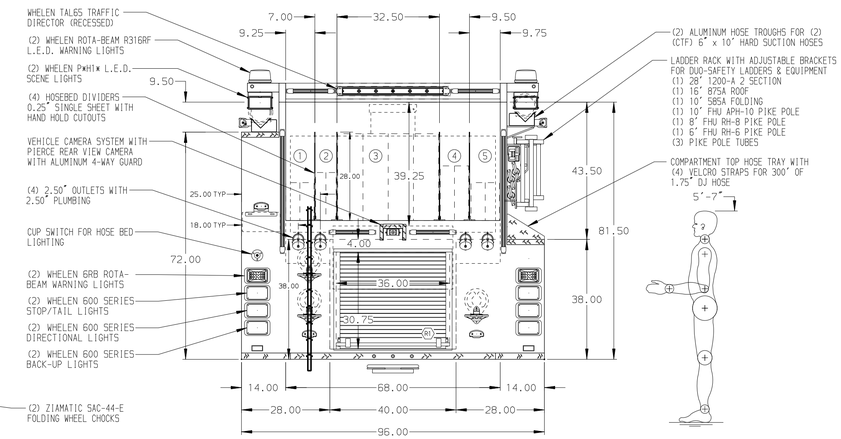

ALUMINUM BODY

SIDE ROLL AND FRONTAL IMPACT PROTECTION

NOTE

DIMENSIONS SHOWN ARE APPROXIMATE AND ARE SUBJECT TO MINOR DEVIATIONS AS MAY OCCUR OR BE NECESSARY IN CONSTRUCTION.
MINOR DETAILS NOT SHOWN.

1. INSTA-CHAIN AUTOMATIC TIRE CHAINS TO BE PROVIDED AT REAR
2. BATTERY CHARGER LOCATED IN COMPARTMENT D3
3. DUAL L.E.D. LIGHT STRIPS LOCATED IN HOSE BED
4. ONE FIXED FULL WIDTH/DEPTH SHELF IN COMPARTMENT D3
5. ONE FULL WIDTH/DEPTH ADJUSABLE SHELF IN COMPARTMENTS D1 & P1
5. ONE FLOOR MOUNTED SLIDE-OUT TRAY IN COMPARTMENT D1
6. ONE SWING-OUT ALUMINUM TOOL BOARD IN COMPARTMENT D2
7. ONE VERTICAL PEGBOARD PARTITION ON FIXED TRAY IN COMPARTMENT D3
9. ALUMINUM PEGBOARD W/O HOLES MOUNTED ON REAR WALL OF D1, D2, & D3
10. TWO 6-PLACE RECEPTACLE STRIPS LOCATED INSIDE CAB

CUSTOMER APPROVAL

APPROVED BY: _____

DATE: _____

REV	DATE	BY	CH
1	04MAY18	GVH	NPA

CHASSIS DATA — MAKE: PIERCE — MODEL: ENFORCER

Pierce MANUFACTURING INC.

TITLE: 1750-D-750P, 152" FH-FDLER DS - LOW-FDLER PS
(2) CROSSLAYS, BOOSTER REEL, DELUGE, SIDE CONTROL

FOR: WESLEY CHAPEL VFD
WESLEY CHAPEL, NORTH CAROLINA

DWG NO.: 32392AD

JOB NO.	SCALE	DRAWN BY	CHECKED BY	SHEET SIZE	SHEET NO.
32392 (01-02)	1:24	GVH	NPA	D	1 OF 1

DATE: 26APR18 — 27APR18

View File Created 04-MAY-2018 10:54:30