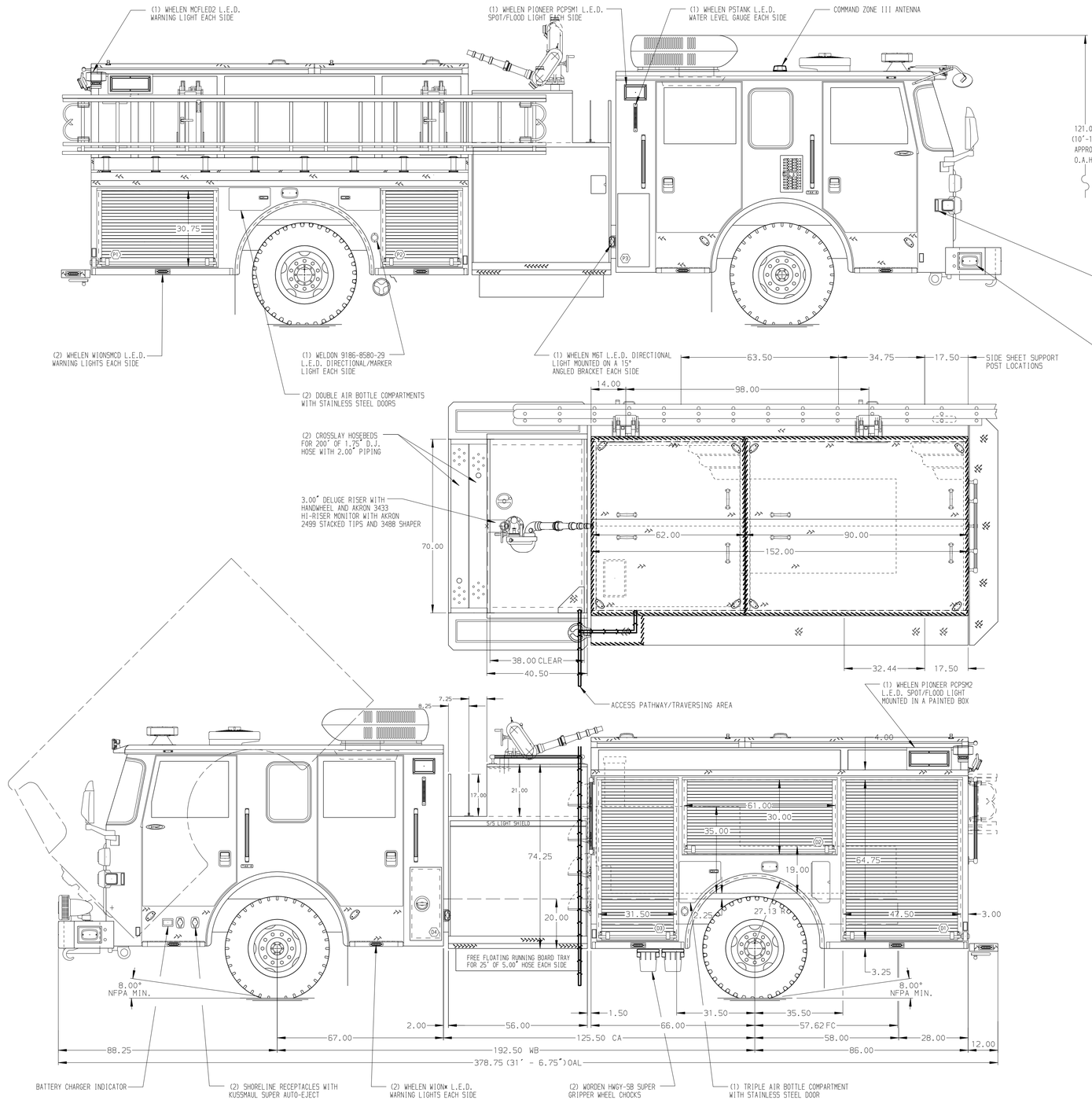

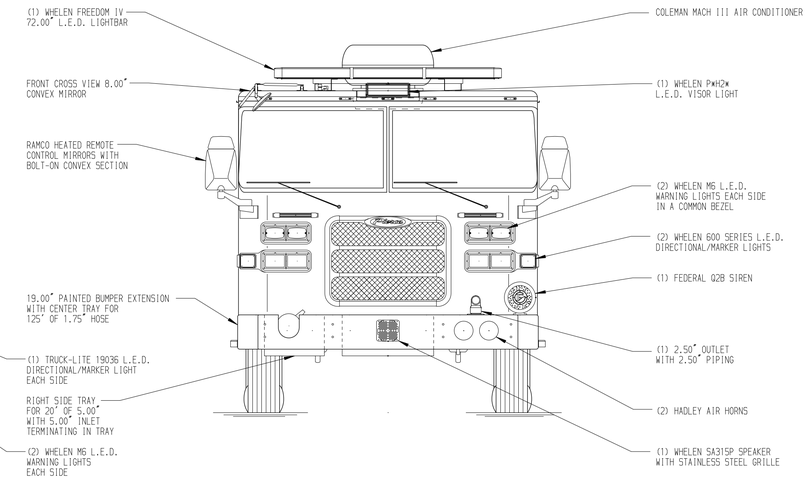

HOSEBED CAPACITIES

1. 250' OF 2.50" HOSE
2. 600' OF 2.50" HOSE
3. 800' OF 5.00" HOSE
4. 200' OF 2.50" HOSE
5. 200' OF 2.50" HOSE (BOTTOM)
   200' OF 1.75" HOSE (TOP)

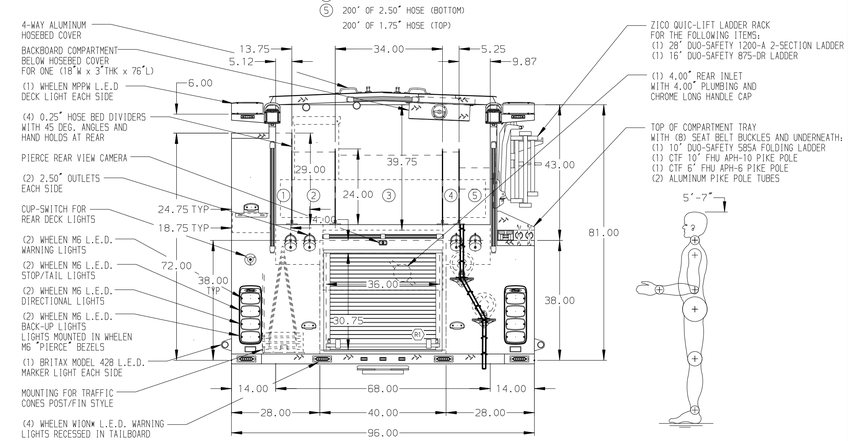

GALVANNEAL

SIDE ROLL PROTECTION

NOTE

DIMENSIONS SHOWN ARE APPROXIMATE AND ARE SUBJECT TO MINOR DEVIATIONS AS MAY OCCUR OR BE NECESSARY IN CONSTRUCTION.
MINOR DETAILS NOT SHOWN.

1. ONSPOT AUTOMATIC TIRE CHAINS TO BE PROVIDED AT REAR
2. AIR INLET/OUTLET WITH DISCONNECT FITTING LOCATED ON DRIVER'S SIDE PUMP PANEL
3. VOGEL 22 POINT LUBE SYSTEM LOCATED IN PUMPHOUSE
4. BATTERY CHARGER LOCATED BEHIND DRIVER'S SEAT

REV	DATE	BY	CH
V	28AUG18	KLE	CHR
V	20AUG18	KLE	CHR
V	10JUL18	AMI	CHR
V	11MAY18	AMI	CCA

CHASSIS DATA
MAKE: PIERCE
MODEL: ARROW XT

Pierce MANUFACTURING INC.

TITLE: 2000-D-500P,152 BODY FDLER EACH SIDE, DS HI PS LOW ALUM HB COVER, 48" PH W/(3) XLAYS
FOR: THE COLONY FIRE DEPARTMENT, THE COLONY, TEXAS
DWG NO.: 32399AD-SH1

JOB NO.	32399 (01-02)
SCALE	1:24
DATE	
DRAWN BY	AMI 02MAY18
CHECKED BY	CCA 02MAY18
SHEET SIZE	D
SHEET NO.	1 OF 2

View File Created 29-AUG-2018 07:18:03