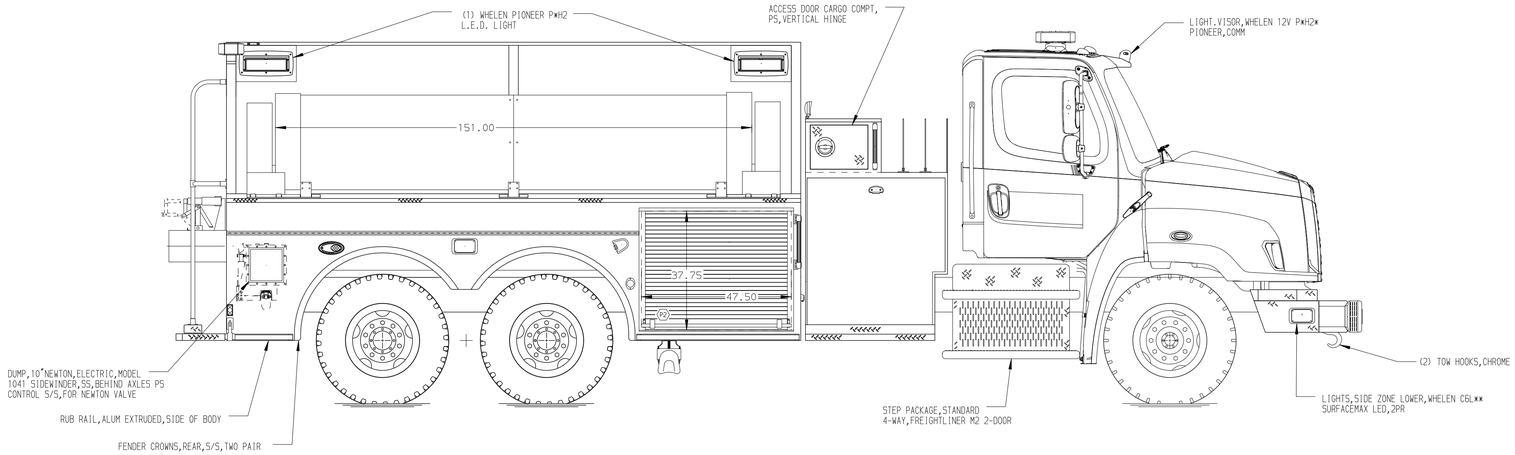

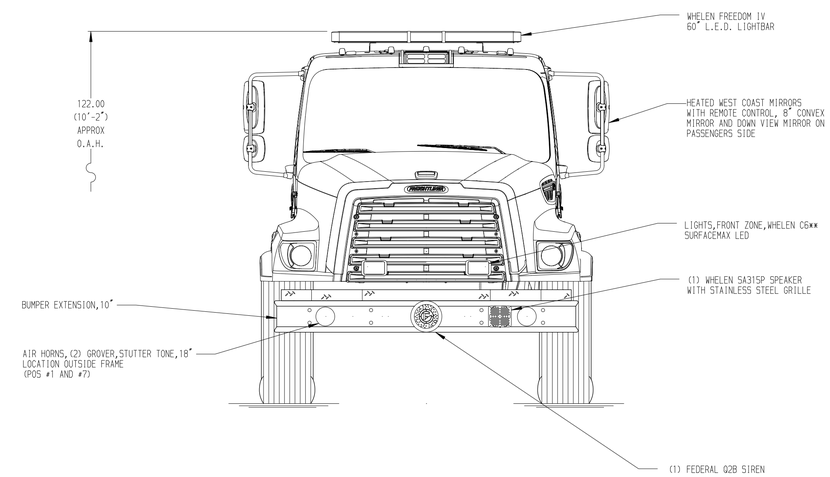

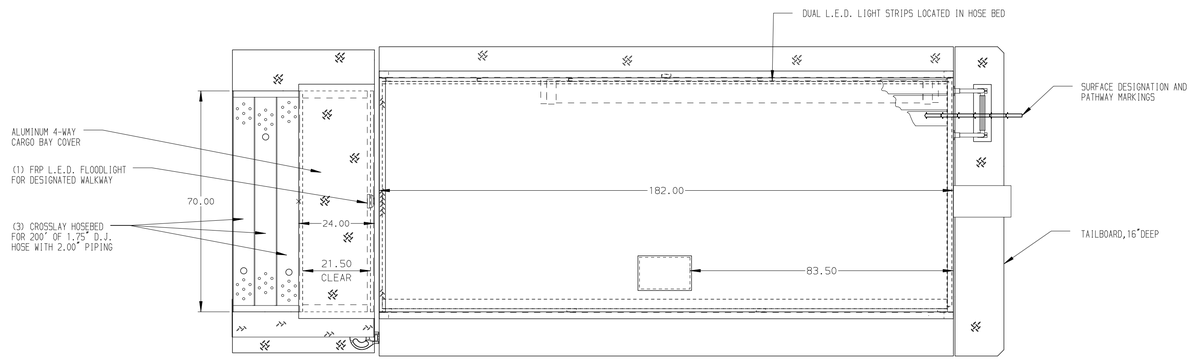

HOSEBED CAPACITIES

1. 300' OF 3.00" D.J. POLY HOSE
2. 1000' OF 5.00" D.J. POLY HOSE

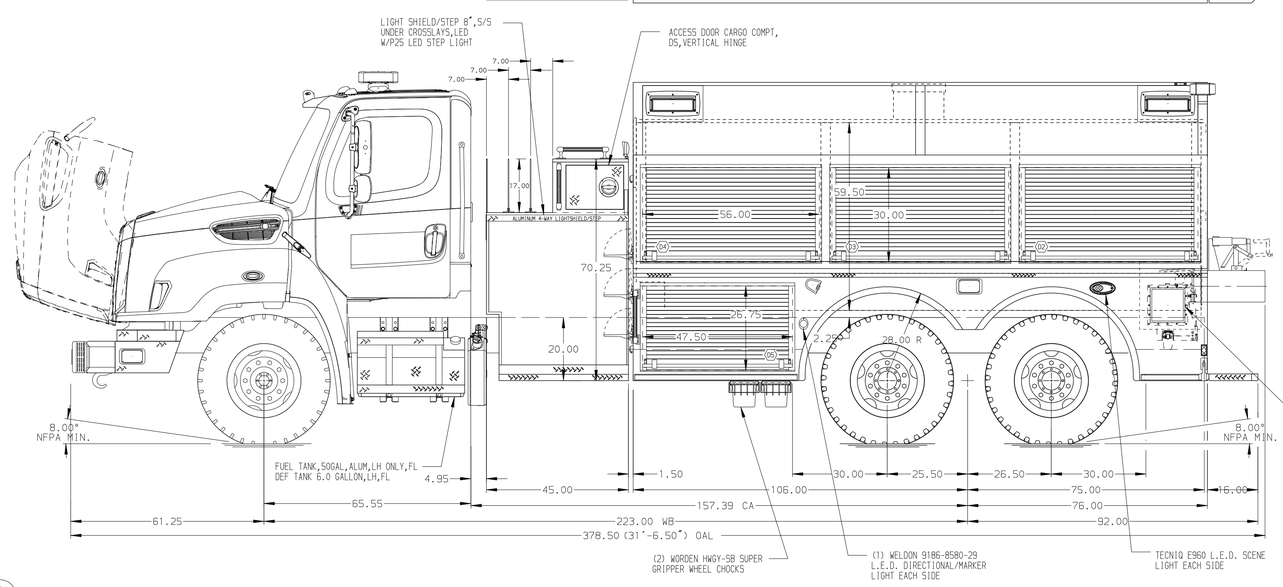

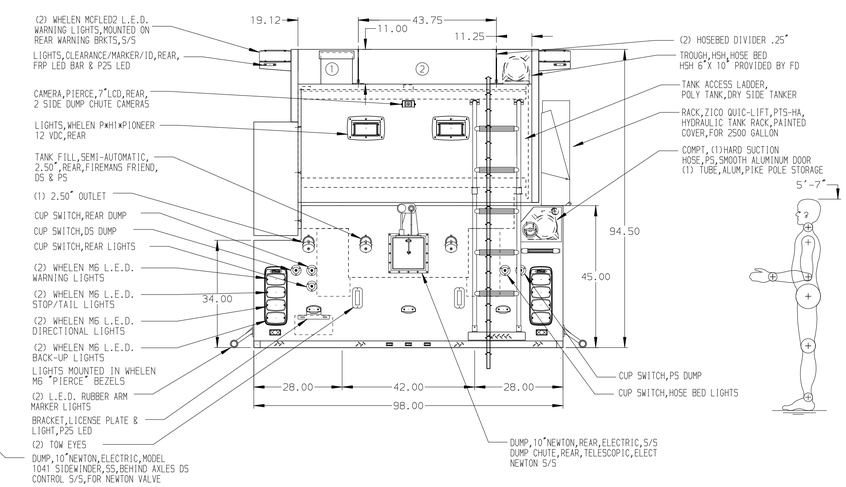

ALUMINUM BODY

NOTE

DIMENSIONS SHOWN ARE APPROXIMATE AND ARE SUBJECT TO MINOR DEVIATIONS AS MAY OCCUR OR BE NECESSARY IN CONSTRUCTION.
MINOR DETAILS NOT SHOWN.

REV	DATE	BY	CH
V	16APR18	RWI	JLA

CHASSIS DATA	
MAKE	FL
MODEL	114SD

Pierce MANUFACTURING INC.
BRADENTON, FLORIDA

TITLE: 1500-D-2500 POLY,182"HIGH SIDE DRYSIDE BODY
45"SIDE CONTROL,(3)1.5"CROSSLAYS

FOR: BARLOW VOLUNTEER FIRE COMPANY
GETTYSBURG, PENNSYLVANIA

DWG NO. 32404AD

JOB NO.	32404
SCALE	1:24
DATE	
DRAWN BY	JLA 03APR18
CHECKED BY	RWI 05APR18
SHEET SIZE	D
SHEET NO.	1 OF 1

View File Created 16-APR-2018 11:45:04