PASSENGER'S SIDE COMPARTMENTS CONTAIN THE FOLLOWING:

COMPARTMENT P1 CONTAINS:
- (2) STD DEPTH ADJ SHELVES
- (1) AKRON ELECTRIC CORD REEL WITH 200' OF 10/4 YELLOW CORD
- (1) SLIDE OUT ROLLER GUIDE BRACKET
-
-

COMPARTMENT P2 CONTAINS:
- (1) STD DEPTH ADJ SLIDE OUT/TILT TRAY
-
-

COMPARTMENT P3 CONTAINS:
- (1) STD DEPTH ADJ SLIDE OUT/TILT TRAY
- (3) STD DEPTH ADJ SHELF
- (2) HYDRAULIC REELS W/100' OF HOSE EACH
- (4) POLY TOOL BOXES
- (1) SLIDE OUT ROLLER GUIDE BRACKET
- (1) VERTICAL REAR WALL DIVIDER
- (1) VERTICAL COMPARTMENT DIVIDER
-

COMPARTMENT P4 CONTAINS:
- (1) CAB LIFT CONTROLLER
- (1) VERTICAL COMPARTMENT DIVIDER
- (1) HORIZONTAL FLOOR EXTENSION
- (1) 1/2 DEPTH ADJ SLIDE OUT/TILT TRAY
- (1) DIVIDER AROUND CAB LIFT CONTROLLER
- CARGO RETENTION NETTING
- (2) 1/2 DEPTH ADJ SHELVES
- (1) 1/2 DEPTH ADJ SLIDE OUT TRAY
-

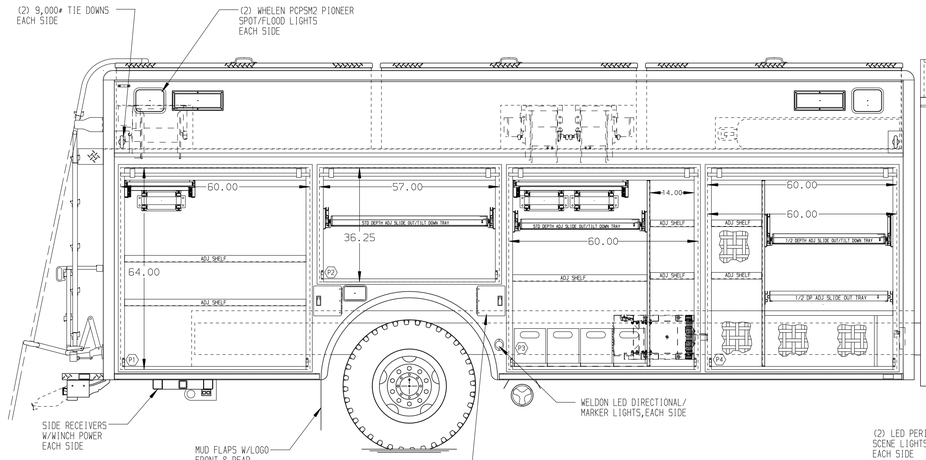

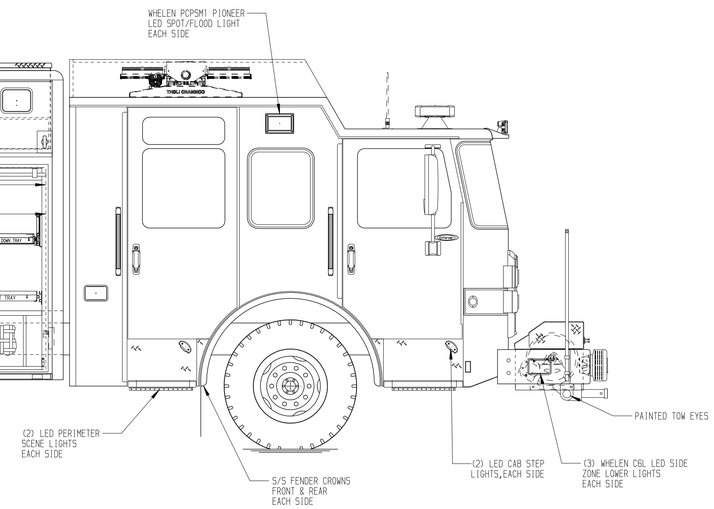

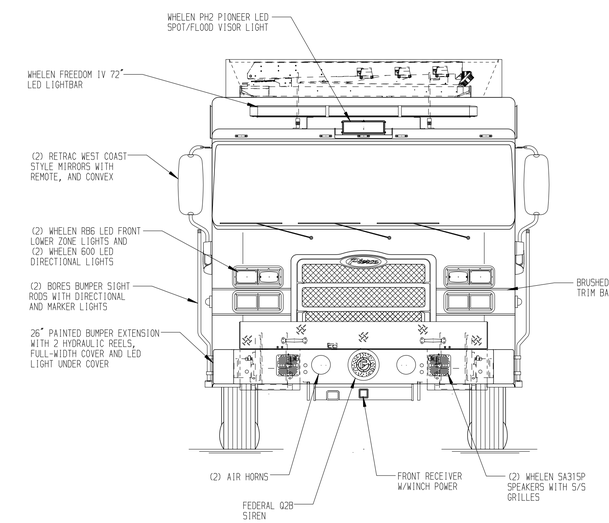

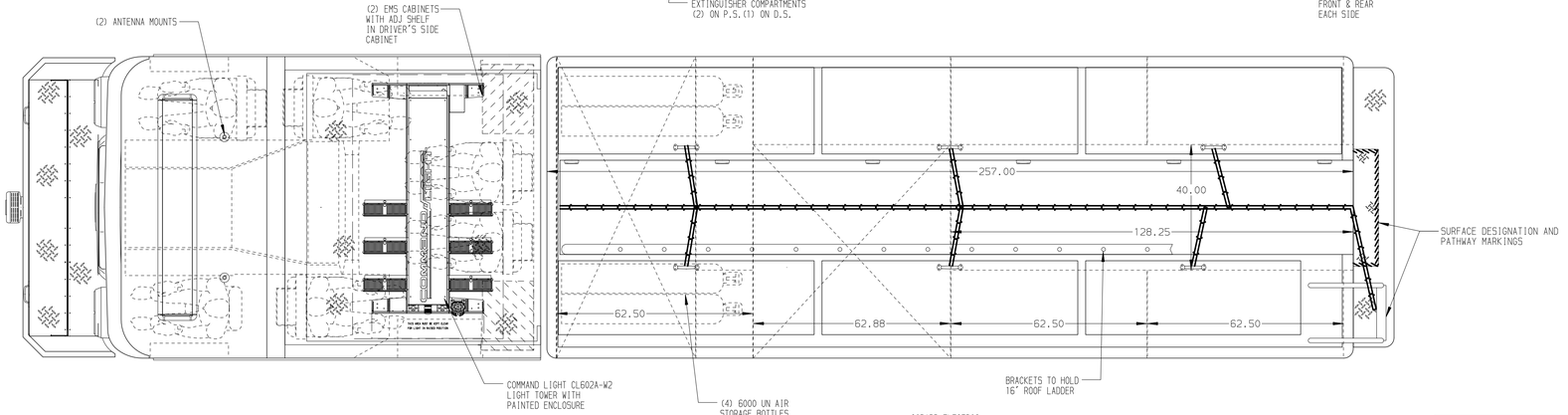

REAR COMPARTMENT CONTAINS THE FOLLOWING:

COMPARTMENT R1 CONTAINS:
- (1) HORIZONTAL FLOOR EXTENSION
- (1) RACK FOR THE FOLLOWING
  - (1) 28' 3-SECTION LADDER
  - (1) 16' ROOF LADDER
  - (1) 14' COMBO LADDER
  - (1) 10' FOLDING LADDER
  - (1) SLOT FOR TRIPOD (11"X 9"X 92")
  - (1) SLOT FOR TIMBERS (11"X 12"X 150")
  - (1) SLOT FOR STOKES BASKET (OPEN TOP)
  - (8) PIKE POLES
- (1) STD DEPTH FLOOR MOUNTED TRAY
-
-
-
-

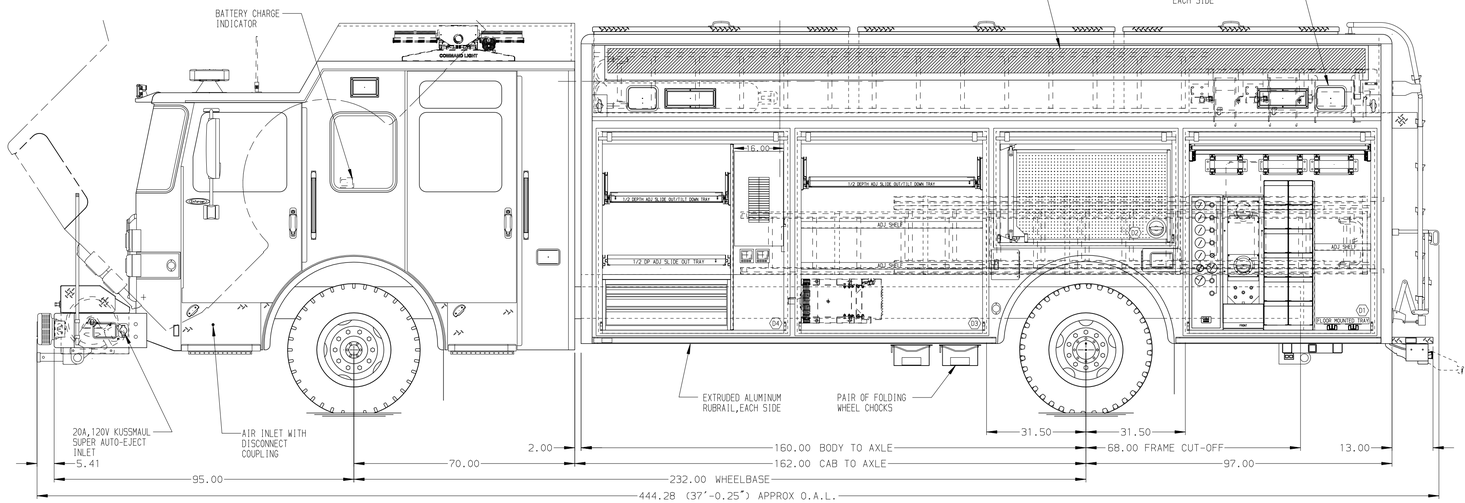

DRIVER'S SIDE COMPARTMENTS CONTAIN THE FOLLOWING:

COMPARTMENT D1 CONTAINS:
- (1) "SPACESAVER"2-BOTTLE FILL ENCLOSURE
- (1) CASCADE SYSTEM CONTROL PANEL
- (1) RACK FOR 12 SCBA BOTTLES
- (1) STD DEPTH ADJ SHELF
- (1) STD DEPTH FLOOR MOUNTED TRAY
- (1) AKRON ELECTRIC CORD REEL WITH 200' OF 10/4 YELLOW CORD
- (1) HIGH PRESSURE AIR REEL W/200' OF HOSE
- (1) LOW PRESSURE AIR REEL W/200' OF HOSE
- (1) SLIDE OUT ROLLER GUIDE BRACKET
-

COMPARTMENT D2 CONTAINS:
- (2) SWING OUT TOOLBOARDS
-
-

COMPARTMENT D3 CONTAINS:
- (2) STD DEPTH ADJ SHELVES
- (1) HALF DEPTH ADJ SLIDE OUT/TILT TRAY
-
-
-

COMPARTMENT D4 CONTAINS:
- (1) VERTICAL COMPARTMENT DIVIDER
- (1) HORIZONTAL FLOOR EXTENSION
- (1) 3-DRAWER C-TECH CABINET
- (1) CIRCUIT BREAKER PANEL
- (1) GENERATOR METER PANEL
- (1) COMMAND LIGHT CONTROLLER
- (1) VERTICAL REAR WALL DIVIDER
- (1) 1/2 DEPTH ADJ SLIDE OUT TRAY
- (1) 1/2 DEPTH ADJ SLIDE OUT/TILT TRAY
-

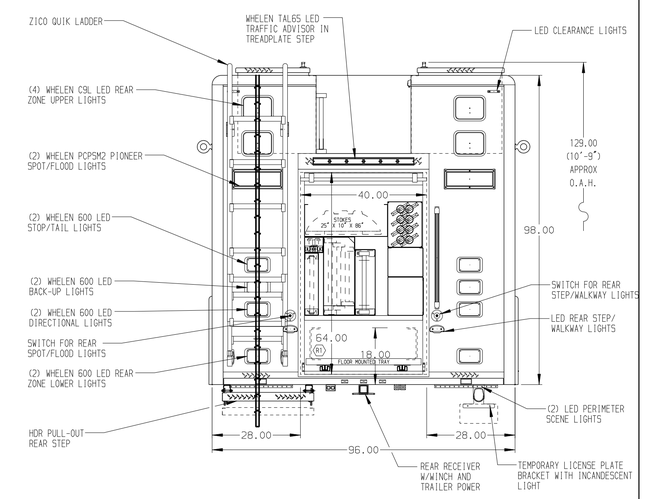

NOTE

DIMENSIONS SHOWN ARE APPROXIMATE AND ARE SUBJECT TO MINOR DEVIATIONS AS MAY OCCUR OR BE NECESSARY IN CONSTRUCTION.
MINOR DETAILS NOT SHOWN.

NOTES:
1. WARN #9,000 PORTABLE WINCH
2. BRUSHED S/S SCUFFPLATES ON CAB AND CREW CAB DOOR JAMBS
3. BRUSHED S/S SCUFFPLATES ON REAR CAB CORNERS
4. FLOOR IN CAB AND CREW CAB TO BE PADDED RUBBER
5. KUSSMAUL PUMP PLUS 1200 CHARGER LOCATED BEHIND THE DRIVER'S SEAT
6. BRUSHED S/S ON FRONT AND REAR BODY CORNERS
7. PULL STRAPS ON ROLL-UP DOORS IN ALL BODY COMPARTMENTS
8. S/S GUARDS OVER ALL BODY ROLL-UP DOORS
9. AMDOR LED LIGHTS IN ALL BODY AND HATCH COMPARTMENTS
10. ONAN 25kW SINGLE PHASE PTO DRIVEN GENERATOR WITH SPLASH GUARD LOCATED BETWEEN THE FRAME RAILS

CLEAR DOOR WIDTH KEY

AMDOR ROLL UP DOORS:	-2 1/4"
GORTITE ROLL UP DOORS:	-2 1/2"
PIERCE DOUBLE LAP DOORS:	-4 1/4"
PIERCE LIFT-UP LAP DOORS:	-1 1/2"

(EX: 60"F-F - 2 1/4"= 57 3/4" CLEAR)
(F-F)= FRAME TO FRAME

REV	DATE	BY	CH
V	14MAY18	DHE	AZU

CUSTOMER APPROVAL

APPROVED BY: _____

DATE: _____

Pierce MANUFACTURING INC.

CHASSIS DATA	TITLE	HEAVY DUTY RESCUE NON-WALKIN	
MAKE PIERCE	FOR	BLUFFTON TOWNSHIP FIRE DISTRICT BLUFFTON, SC	
MODEL EN7010	DWG NO.	32450AD	

JOB NO.	32450
SCALE 1:24	DATE
DRAWN BY DHE	30APR18
CHECKED BY AZU	30APR18
SHEET SIZE D	SHEET NO. 1 OF 1

View File Created 14-MAY-2018 09:08:45